SPECIFICATION FOR SET OF PANELS FOR LHB EOG NON-AC COACHES

1.0 SCOPE:

1.1 This specification is for design, manufacture, testing and supply of Switch Board Cabinet consisting all the power/control switchgear related to coach lighting, pantry, pump control etc. for LHB EOG NON-AC Coaches suitable for 3 phase, 750 volts, 50 Hz train line system.

1.2 The quality, aesthetics, design and overall workmanship of Switchboard cabinet as a whole shall be to international standards and the quality of existing LHB equipment shall be considered prime basis.

1.3 Firm shall have adequate in-house infrastructure and experience of design, development and manufacturing of similar complex panels (stainless steel) on CNC machines and shall be capable of developing materials to the required quality and standards.

1.4 The firm shall maintain date-wise in-house quality control system and in-house quality control records etc. for in stage process inspection and testing and the same shall be made available to the inspecting official during type testing.

1.5 It will be the responsibility of the supplier to ensure and confirm that the equipment /part purchase from other vendors are as per relevant standard and original manufacturer last certificate are being obtained by the firm and are tested. Firm shall also keep record of in-house inspection.

2.0 SERVICE CONDITIONS:

2.1 ENVIRONMENTAL CONDITIONS

Ambient Temperature	: -5°C to 55°C
Maximum Relative Humidity	: up to 98% during the rainy season
Altitude	: Maximum 1000 Meters

2.2 WORKING CONDITIONS

Train Speed	: 160KMPH
Vibration and Shocks	
a) Maximum Vertical Acceleration	: 3.0g
b) Maximum lateral Acceleration	: 3.0g
c) Maximum longitudinal Acceleration	:3.0g
d) Frequency and amplitude	:Sinusoidal form of vibration, the frequency 'f' lies between 1 Hz and 100 Hz and their amplitude 'a' expressed in mm is given as function of 'f' by equation $a=25/f^2$ for values of 'f' between 1 and 10Hz

$a=25f^2$ for values of 'f' between 10 and 100 Hz

3.0 GOVERNING SPECIFICATIONS:

3.1 Reference shall be made to following standard/specifications.

IS:13947(Pt-I)1983	Low voltage switchgear and control gear Part-I General rules
IS:13947(Pt-3)-1993	Part-3 – Switches, disconnectors and fuse combination unit
IS:8623-1993 Pt-1	Low voltage switchgear and control gear assemblies: Part-I Requirements for the type tested and partially type tested assemblies.
IS:10118-1982	Code of practice for selection, Installation and maintenance of the switchgear and the controlgear
IS:13703-1993	Low voltage fuses for voltages not exceeding 1000 volts or 1500 volts DC
IS:1248 Part-II-1983	Direct acting indicating analog electrical measuring instruments and their accessories (ammeter and voltmeters)
IS:8828-1996	Electrical accessories, circuit breakers for over current protection for household and similar installations.
IS:1573-1986	Electroplated coating of Zinc on Iron and Steel
IS:1364-1992	Hexagon head bolts, screws and nuts of product grades A and B
UIC550	Power supply installation for Passenger stock

4.0 CONSTRUCTIONAL REQUIREMENTS:

4.1 The set of panels comprises of the various cubicles consisting of power and control switchgear consisting of following

i	H V Cubicle	LS71103	2000(L)x550(D)x525(H)
ii	Battery Charger Box	LS71104	900(L)x750(D)x500(H)
iii	Low Voltage Panel including cable cover for top and bottom as indicated in the drawing	CC72081	500(W)x130(D)x1000(H) with mounting angle of 125mm on top and bottom

No positive tolerances are allowed. However, negative tolerances shall be governed by MDG0008

4.2 The cubicles indicated at item i) and ii) above shall consist of welded stainless steel construction TIG welded to make complete frame with dimensions as indicated in the respective drawings.

4.2.1 The panel shall be made of stainless steel SS304 grade S2 to IS:6911(Latest Edition). Welded zones may be given necessary treatment after fabrication and shall not be painted. Thickness of the sheet shall be 2mm and may be increased in some areas for strengthening against vibrations and shocks.

4.2.2 The stainless steel sheets shall be of approved makes.

4.2.3 Necessary equipment for cutting / welding shall be available with the firm for quality work.

4.3 The on-board cabinet shall conform to CRCA sheet of thickness 2 mm conforming to IS:513(Latest Edition) as indicated in the drawing. The on board panel shall be powder coated to Siemens Grey shade no 6102/08038 of M/s Nerolac Paints or 877 of M/s Berger paints, after giving surface treatment.

4.4 The dimensions/mounting/general layout of the switch board cabinet shall be conforming to drawings as indicated in at clause 4.1 of this specification . The drawings annexed are for general guidance only. For change in layout for manufacturing/improving the aesthetics from maintenance point of view, the manufacturer shall take prior approval.

4.5 Most critical safety component in the panels is wide-band contactors. No deviation shall be given for these contactors. Inspecting agency shall specifically check this aspect that these contactors regarding make of these.

4.6 Suitable PVC alleys/duct with snap-in element of M/s. L&T/AKG shall be provided for cable traversing as indicated in the drawings. Whenever the cables shall cross the door/passage area, the cables shall be covered by self extinguishing and halogen free braiding/nylon jacket (polyamide 6.6) of approved make.

4.7 All the devices fitted in the swtch board cabinet shall allow access for easy maintenance of all the equipments from the front of the panel.

4.8 The location and size of hinges shall be as per the respective drawing for the cubicles.

4.9 The internal wiring shall be done with Halogen free electron beam irradiated cables conforming to RDSO specification no. ELRS/SPEC/ELC/0019 Rev-2. The size/type of cables shall be as indicated in drawing no. LS70117, alt. 'a' (5 sheets). All cables/wiring/Sleeves shall be of color coded according to phases for identification. Control wiring and power cables shall be segregated according to the voltages and adequately secured with cable ties.

4.10 All components provided inside the panel shall be identified by screen/photo printed or computer generated designation labels/legend marking plates. These should be mounted near the concerned component duly ensuring visibility. Circuits and components shall also be provided with the name plates indicating the operation/function of the switches/circuits. Contactors and circuit codification diagram (with glass

fuses details) shall be identified by aluminum anodized legend plates by adhesive of approved make on back side of left hand front doors. Balance indicating/measuring switchgear/devices installed on front door shall be identified by aluminum anodized legend plates by adhesive of approved make on the front doors itself. No riveting is allowed on front door.

4.11 a) The outgoing/incoming terminal connections shall be brought out to a adequately rated cage clamp type terminal block/MCB.

b) The terminal blocks shall be ocated for easy access as indicated in the drawing.

c) Separators/intermediate plates shall be provided between adjacent terminal blocks, wherever required.

d) All cables leading to a terminal block shall be properly secured/ clamped before termination.

e) It shall be ensured that not more than two wires are terminated at one point.

f) The power panel shall be complete with all necessary crimping sockets and ferrules for ready connections. Rings type copper crimping sockets shall be used for cable sizes up to 1.5sqmm otherwise tubular crimping sockets shall be used with suitable palm size to prevent loose connections during vibrations. Only copper crimping sockets of approved make and conforming to the requirements of RCF specification no. EDTS200 and EDTS201 shall be used. Crimping sockets of size smaller than 16sqmm shall be with metal reinforcement.

g) Marking ferrules shall be of computer generated type for easy identification of the cables with the help of shrinking sleeves (self extinguishing) of suitable size horizontally printed or with the help of mintmark carrier/label of M/s. Tyco/Penduit/Pheonix only.

h) All cut-outs wherein cables enter/exit the switch board cabinet shall be provided with V-grooved fire retardant rubber grommets/edge protection sleeves of reputed make from protection against sharp edges.

4.12 Two earthing terminals shall be provided on top and bottom of the panel on diagonally opposite ends. For earthing two braided copper cable of 70sqmm and 300mm in length each duly crimped shall be supplied with the panel. Earthing of the metal parts/sub-assemblies inside the panel shall also be done as indicated with suitable wire size as determined vide clause 7.4.3.1.7 (a) or IS:8623(Pt-I)-1993.

4.13 Manufacturer's name plate indicating name and address, Sr. No. of the panel, Specification no. month and year of manufacturer and weight shall be fixed on the front door of the panel.

4.14 Danger Notice plate shall be screen printed or sticker shall be provided on front of the lower panel door conforming to IS: 2551-82 for 750V.

4.15 The Power/Control connections of the switch board cabinet shall be as per wiring diagram to drawing LS70117, alt. 'a'.

4.16 Care shall be taken to achieve a neat and symmetrical layout.

4.17 Only makes mentioned in the bill of material as per Annexure-A shall be used. For any deviation prior approval from CEE shall be taken.

4.18 All the equipment fitted in the panel shall be easily accessible for replacement/checking.

4.19 All rotary switches shall conform to IS:13947 (Pt-III)-93 and shall be suitable for universal mounting.

4.20 All fasteners used shall be zinc plated and passivated according to IS: 1573-86 and conforming to IS: 1364-92.

4.21 All the components/ equipmerts/ materials including paint shall be fire retardant. Panel manufacturer shall certify this requirement.

4.22 General and safety requirements shall be governed by IS: 13947 (Pt-I)-93 and IS: 8623-1993.

4.23 The general construction of the switch board cabinet shall be such as to keep the various voltage levels separated against each other as far as possible.

4.24 High Voltage Cubicle:

4.24.1 A disconnecting and earthing device alongwith high voltage fuses shall be located as indicated in the drawing. The main function of this device is to separate the two feeders (input supply) and simultaneously earthing 750 volts ac network of the coach. The connections to this device shall be made by removing the top cover on the front of the device

4.24.2 Suitable mounting plate shall be provided on the back of the panel to house the switchgear for main contactors, measuring and monitoring relays, contactors for pump control, MPCB, mounting for pump controller and cage clamp terminals.

4.24.3 The voltmeters and necessary rotary switches as indicated in the drawing shall be mounted on a plate welded or screwed to the top frame as indicated in the drawing.

4.24.4 Wheel slip protection is not in the scope of supply of the panel manufacturer, however suitable angles with terminals for mounting shall be provided in the panel.

4.25 Regulated Battery Charger Cubicle :

4.25.1 The cubicle shall house the regulated battery charger alongwith the connectors as indicated in the drawing.

4.25.2 The interconnecting cables for the charger shall be supplied alongwith the cubicle.

4.26 On Board Rotary Switch Panel

4.26.1 The on-board panel shall house the rotary switch panel as used in conventional coaches for distribution of light and fan as per the schematic and wiring diagram

4.26.2 The rotary switch for the feeder selection shall be provided on the panel to select the feeders as provided in the undeslung HV cubicle. It may be noted that the control for the feeders selection contactors shall be on 110 volts dc only.

4.26.3 The connectors for the mobile charging socket shall be provided in the panel as indicated in the drawing.

4.26.4 Suitable hat section trays shall be supplied alongwith the panel for covering the conduits/cables coming in/out of the cubicle.

5.0 TESTS:

5.1. TYPE TEST:

5.1.1 All the type tests mentioned in Clause 5.4 shall be carried out on a prototype unit. The firm manufacturing for the first time shall get the prototype approved from CEE/RCF.

5.2 ROUTINE TEST:

5.2.1 Routine tests mentioned in clause 5.5 shall be carried out on each unit by the manufacturer at his works to ensure compliance with the specification and the drawings.

5.3 ACCEPTANCE TEST:

5.3.1 Acceptance test mentioned in clause 5.4 are to be carried out by an inspecting authority nominated by the purchase at the works of the manufacturer, on the samples picked up by the inspecting authority.

5.3.2 All the acceptance tests shall be carried out at firm's premises at the manufacturer's cost. Inspecting officer will witness the tests. A copy of the internal tests conducted by the firm shall be supplied to inspection/purchasing authority.

5.4 Tests as mentioned I table below shall be carried out as per respective clause of IS: 8623(Pt-I)-93.

Sr. No.	Clauses of IS:8623	Tests	Type Test	Routine Test	Accept Test
1	8.3.1	Visual inspection, including inspection of wiring and electrical operational test	YES	YES	YES
2	8.2.1	Temperature rise test	YES	NO	NO
3	8.2.6	Mechanical operation and sequence test	YES	YES	YES
4	8.2.5	Test for verification of clearance and creepage distances	YES	NO	NO
5	8.2.2	Test for verification of dielectric properties	YES	YES	YES
6	8.3.4	Test for verification of insulation resistance	YES	YES	YES
7	8.3.3	Checking of electrical continuity	YES	YES	YES
8	8.2.4	Verification for effectiveness of protective circuits	YES	YES	YES
9	--	Check for satisfactory operation of rotary switches by rotating 10 times clockwise and 10 times anti-clockwise. (WTC of rotary switches of OEM shall be checked by inspecting authority	YES	YES	YES
10		Check for BOM and proof of material as per spec. with proof of invoices	YES	YES	YES

5.4 The accuracy of measuring instruments used for both type and routine tests shall be of class-1.5.

5.5 For the commissioning of first panel, panel manufacturer shall depute his staff at RCF for interface with respect to items falling in RCF scope of supply.

6.0 APPROVALS:

6.1 The firm manufacturing for the first time will arrange in stage inspection by the representative of the CEE/RCF at the following stages and get prototype approval for it.

- Manufacture/fabrication of the enclosure of the panel.
- Structural/dimensional drawing of the switchboard cabinet
- Mounting/fixing of equipment and layout of the switchgears
- Power/control wiring
- Final inspection/testing

6.2 The supplier may also be required to attend joint reviews regarding the development of prototype unit and submit the detailed clause by clause comments, bill of material, in-house test results before asking for prototype inspection by CEE office.

6.3 The tenderer may seek technical clarifications, if any, in writing 30 days before opening the tenders.

7.0 COMMISSIONING:

7.1 The panel manufacturer shall asscciate with RCF during fitment and commissioning of the panels at RCF.

8.0 ENCLOSURES:

Sr. No.	Drawing/ Document No.	Description
1.	LS71103	H V Cubicle
2.	LS71104	Regulated Battery Charger Cubicle
3.	LS71105	Terminal codification for Battery charger cubicle
4.	CC72081	Low voltage on-board Rotary switch Panel
5.	CC72082, alt. 'a'	Fuse and Terminal panel
6.	LS70117, alt. 'a' (5 sheets)	Schematic wiring diagram for Switch Board Cabinet for LHB EOG Non-AC coaches
7.	Annexure-A	Bill of material
8.	Annexure-B	Terminals for HV cubicle
9.	EDTS-200, Rev. 'NIL', Am-1	Specification for Tubular Crimping Sockets' for E-beam cables
10.	EDTS-201, Rev. 'A', Am-1	Specification for 'Ring Tongue type' crimping sockets for E-beam cables

ALT.NO	ALT.DATE	ZONE	ALTERATIONS	AUTHORITY
NIL	NIL	NIL	NIL	NIL

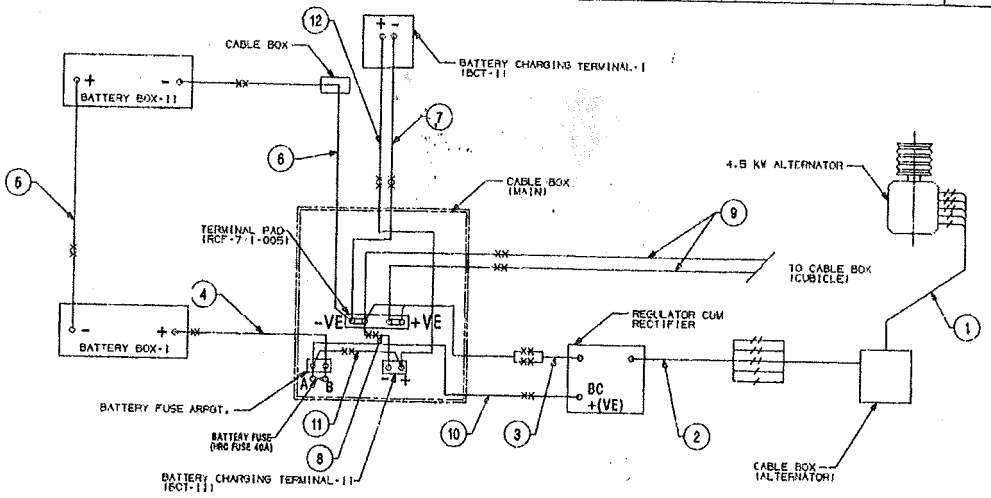

HARNESS CHART

HARNESS NO.	NO. OF HARNESS	FROM	TO	CABLE SIZE	COLOUR	WIRE SYMBOL	QTY.PER HARNESS	APPROXIMATE LENGTH IN MM	REMARKS
1	1	ALTERNATOR	CABLE BOX (ALTERNATOR)	18 SQ.MM., ELECTRON-BEAM COPPER CABLE	GREY	R	1	5500	
				18 SQ.MM., ELECTRON-BEAM COPPER CABLE	GREY	Y	1	5500	
				18 SQ.MM., ELECTRON-BEAM COPPER CABLE	GREY	B	1	5500	
				6 SQ.MM., ELECTRON-BEAM COPPER CABLE	RED	F+	1	5500	
				6 SQ.MM., ELECTRON-BEAM COPPER CABLE	BLUE	F-	1	5500	
2	1	CABLE BOX (ALTERNATOR)	REGULATOR CUM RECTIFIER	16 SQ.MM., ELECTRON-BEAM COPPER CABLE	GREY	R	1	5000	
				16 SQ.MM., ELECTRON-BEAM COPPER CABLE	GREY	Y	1	5000	
				16 SQ.MM., ELECTRON-BEAM COPPER CABLE	GREY	B	1	5000	
				6 SQ.MM., ELECTRON-BEAM COPPER CABLE	RED	F+	1	5000	
				6 SQ.MM., ELECTRON-BEAM COPPER CABLE	BLUE	F-	1	5000	
3	1	ERRU	UNDERFRAME TERMINAL BOARD	25 SQ.MM., ELECTRON-BEAM COPPER CABLE	RED	+VE	1	9000	
				25 SQ.MM., ELECTRON-BEAM COPPER CABLE	BLUE	-VE	1	9000	
4	1	BATTERY FUSE (B)	BATTERY BOX-I	25 SQ.MM., ELECTRON-BEAM COPPER CABLE	RED	+VE	1	1500	
5	1	BATTERY BOX-I	BATTERY BOX-II	25 SQ.MM., ELECTRON-BEAM COPPER CABLE	RED	---	1	7000	
6	1	UNDERFRAME TERMINAL BOARD	BATTERY BOX-II	25 SQ.MM., ELECTRON-BEAM COPPER CABLE	BLUE	-VE	1	11500	
7	1	UNDERFRAME TERMINAL BOARD	BCT-I (-VE)	25 SQ.MM., ELECTRON-BEAM COPPER CABLE	BLUE	-VE	1	3500	
8	1	UNDERFRAME TERMINAL BOARD	BCT-II (-VE)	25 SQ.MM., ELECTRON-BEAM COPPER CABLE	BLUE	-VE	1	500	
9	1	UNDERFRAME TERMINAL BOARD	CUBICLE	25 SQ.MM., ELECTRON-BEAM COPPER CABLE	RED	+VE	1	17000	
				25 SQ.MM., ELECTRON-BEAM COPPER CABLE	BLUE	-VE	1	17000	
10	1	ERRU (BC+VE)	BATTERY FUSE (A)	25 SQ.MM., ELECTRON-BEAM COPPER CABLE	RED	+VE	1	9000	
11	1	BCT-II (+VE)	BATTERY FUSE (A)	25 SQ.MM., ELECTRON-BEAM COPPER CABLE	RED	+VE	1	500	
12	1	BCT-I (+VE)	BCT-II (+VE)	25 SQ.MM., ELECTRON-BEAM COPPER CABLE	RED	+VE	1	3500	

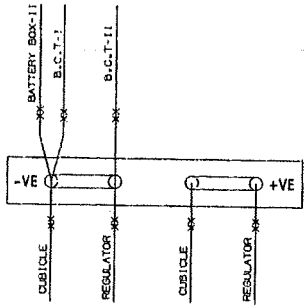

TERMINATION AT UNDER FRAME TERMINAL BOARD

CABLE SIZE	SYMBOL	SPECIFICATION
6 SQ.MM. ELECTRON BEAM IRRADIATED COPPER CABLE	—/—	EDTS132,REV.'C' AM-1,DATA SHEET-2
18 SQ.MM. ELECTRON BEAM IRRADIATED COPPER CABLE	—//—	
25 SQ.MM. ELECTRON BEAM IRRADIATED COPPER CABLE	—XX—	

11	CABLE MARKER DATA FOR UNDERFRAME WIRING WITH PROVISION OF DC FANS	1	LS70110	NIL	ITEM-1
10	FRLT COTTON INSULATION TAPE,BLUE	1	ICF/ELEC/921,REV.00	NIL	NIL
9	FRLT COTTON INSULATION TAPE,RED	1	ICF/ELEC/921,REV.00	NIL	NIL
8	COPPER CRIMPING SOCKET FOR 25SQMM E-BEAM COPPER CABLE	24	EDTS200, REV.'NIL'	NIL	ITEM-13
7	COPPER CRIMPING SOCKET FOR 16SQMM E-BEAM COPPER CABLE	12	EDTS200, REV.'NIL'	NIL	ITEM-15
6	COPPER CRIMPING SOCKET FOR 6SQMM E-BEAM COPPER CABLE	8	EDTS201, REV.'NIL'	NIL	ITEM-4
5	25SQMM, COLOUR BLUE ELECTRON BEAM IRRADIATED COPPER CABLE 600/1000 VOLTS (IN MTRS.)	42	EDTS132, REV.C,AM-1	NIL	DATA SHEET-2
4	25SQMM, COLOUR RED ELECTRON BEAM IRRADIATED COPPER CABLE 600/1000 VOLTS (IN MTRS.)	43	EDTS132, REV.C,AM-1	NIL	DATA SHEET-2
3	16SQMM, COLOUR GREY ELECTRON BEAM IRRADIATED COPPER CABLE 600/1000 VOLTS (IN MTRS.)	22	EDTS132, REV.C,AM-1	NIL	DATA SHEET-2
2	6SQMM, COLOUR BLUE ELECTRON BEAM IRRADIATED COPPER CABLE 600/1000 VOLTS (IN MTRS.)	11	EDTS132, REV.C,AM-1	NIL	DATA SHEET-2
1	6SQMM, COLOUR RED ELECTRON BEAM IRRADIATED COPPER CABLE 600/1000 VOLTS (IN MTRS.)	11	EDTS132, REV.C,AM-1	NIL	DATA SHEET-2

2. NUMBERS INDICATED IN CIRCLE ARE HARNESS NUMBERS.
1. CABLE LENGTHS GIVEN AGAINST EACH HARNESS ARE ONLY APPROXIMATE AND CORRECT LENGTH SHALL BE ADVISED BY SHOPS TO DESIGN OFFICE AFTER WIRING FIRST COACH.

NOTE:-

ANY MANUAL ALTERATION SHALL AUTOMATICALLY RENDER THIS DRAWING INVALID.

FOR UNTOLERANCED DIMENSIONS REFER MDG0008

DETAIL DRGS STARTING WITH "LI" ARE INTERNAL REFERENCE LISTS ONLY AND ARE NOT FOR ISSUE.

DATE OF FIRST ISSUE 07/03/2009

WELD LENGTH	ITEM	DESCRIPTION & DIMENSIONS	QUANTITY	DETAIL DRG	MATL. & SPEC.	REMARKS
NIL M	GROUP	ELECTRICAL	SUPERSEDES:	NIL		
WEIGHT	FILE	\\IBMX3H00\ELEC\PANDI\LOW_COST_LHB_SCN\LS70103.prt(20)				
NIL KG		BLOCK AND WIRING DIAGRAM AND HARNESS CHART FOR UNDERFRAME(110V DC TL SYSTEM)(FOR LOW COST LHB SCN COACH WITH PROVISION OF DC FANS)			SCALE	SSE/ED
S.AREA					NTS	CHD
NIL M²						DRN
~~LENGTH/DIA~~						
NIL M		RAIL COACH FACTORY, KAPURTHALA			REFERENCE NIL	
WIDTH/THICK.						
NIL M		INDIAN RAILWAYS STANDARD			PL NO.	NIL
HEIGHT					DRG.NO.	LS70103
NIL M		SPE/D&D	DY.CEE/D&D		ALT. NIL	SIZE A1 SHEET 1/1

ALT.NO	ALT.DATE	ZONE	ALTERATIONS	AUTHORITY
NIL	NIL	NIL	NIL	NIL

TABLE-1

S.NO	SIZE	DISCRIPTION	QPC
1	4 SQ.MM	CAT.NO.RPS-1K-16-10/2.0-4 OF M/S TYCO ELECTRONICS OR EQUIVALENT APPROVED MAKE	10
2	6-16 SQ.MM	CAT.NO.RPS-1K-8-4/2.0-4 OF M/S TYCO ELECTRONICS OR EQUIVALENT APPROVED MAKE	40

TABLE-2

S.NO	SIZE	DISCRIPTION	QPC
1	1.5-2.5 SQ.MM	CAT.NO.RPS-1K-22-18/2.0-4 OF M/S TYCO ELECTRONICS OR EQUIVALENT APPROVED MAKE	700
2	4 SQ.MM	CAT.NO.RPS-1K-16-10/2.0-4 OF M/S TYCO ELECTRONICS OR EQUIVALENT APPROVED MAKE	250

NOTE:-

1. REFER TABLE-1 FOR ITEM-1 AND TABLE-2 FOR ITEM-2

ITEM	DESCRIPTION & DIMENSIONS	QPASSLY	DETAIL DRG	MATL. & SPEC.	REMARKS
2	CABLE MARKER DATA CHART FOR ROOF WIRING	1	NIL	NIL	SEE NOTE-1
1	CABLE MARKER DATA CHART FOR UNDERFRAME WIRING	1	NIL	NIL	SEE NOTE-1

WELD LENGTH: NIL M
WEIGHT: NIL KG
S.AREA: NIL M²
~~LENGTH / DIA~~: NIL M
~~WIDTH / THICK~~: NIL M
HEIGHT: NIL M

GROUP: ELECTRICAL
SUPERSEDES: NIL
FILE: \\IBMX3800\ELEC\LS70104.prt(2D)

CABLE MARKERS (HYBRID COACH) WITH PROVISION OF DC FANS.

RAIL COACH FACTORY, KAPURTHALA

रेलकोचफैक्टरीकपूरथला IRS

SEE/D&D — DY.CEE/D&D

SCALE | SSE/GD | CHD | DRN | REF.DWG.NO NIL

PL NO. NIL

DRG.NO. LS70104

ALT. NIL | SIZE A3 | SHEET 1/1

DETAIL DRGS STARTING WITH "LI" ARE INTERNAL REFERENCE LISTS ONLY AND ARE NOT FOR ISSUE.
THIS IS A COMPUTER GENERATED DRAWING. ANY MANUAL ALTERATION SHALL AUTOMATICALLY RENDER IT INVALID.
FOR UNTOLERANCED DIMENSIONS REFER MDG0008 | DATE OF FIRST ISSUE 01/10/2009

ALT.NO.	ALT.DATE	ZONE	ALTERATIONS	AUTHORITY
NIL	NIL	NIL	NIL	NIL

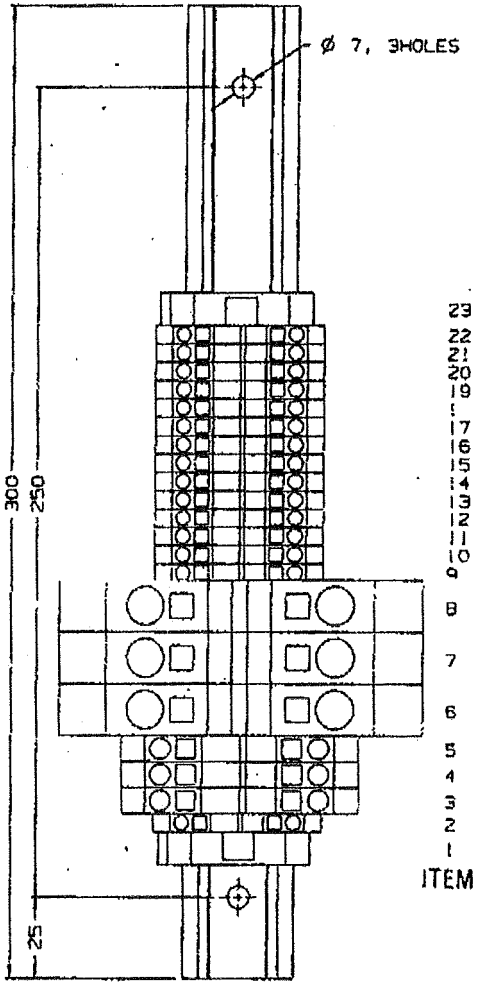

NO.	TERMINAL-X3
19	SPARE
18	SPARE
17	SPARE
16	SPARE
15	SPARE
14	SPARE
13	SPARE
12	SPARE
11	SPARE
10	SPARE
9	SPARE
8	SPARE
7	SPARE
6	SPARE
5	BATTERY (-VE)
4A	BATTERY (+VE)
4	COACH LOAD (+VE)
3	INPUT
2	INPUT
1	INPUT

ITEM	TERMINAL TYPE
23	249-117
22	280-901
21	280-901
20	280-901
19	280-901
18	280-901
17	280-901
16	280-901
15	280-901
14	280-901
13	280-901
12	280-901
11	280-901
10	280-901
9	280-901
8	285-601
7	285-601
6	285-601
5	282-901
4	282-901
3	282-901
2	282-607
1	249-117

THIS DRAWING IS THE INTELLECTUAL PROPERTY OF RAIL COACH FACTORY, KAPURTHALA. THIS DRAWING SHOULD NOT BE REPRODUCED, ALTERED, USED FOR MANUFACTURING OF COMPONENTS, SOLD OR TRANSFERRED WITHOUT PERMISSION FROM CHIEF DESIGN ENGINEER, RAIL COACH FACTORY, KAPURTHALA.

NOTE:- 1. ALL DIMENSIONS IN MM.

DETAIL DRGS STARTING WITH "LI" ARE INTERNAL REFERENCE LISTS ONLY AND ARE NOT FOR ISSUE

ANY MANUAL ALTERATION SHALL AUTOMATICALLY RENDER THIS DRAWING INVALID.

FOR UNTOLERANCED DIMENSIONS REFER MDG0008 | DATE OF FIRST ISSUE | 10/01/2012

WELD LENGTH	ITEM	DESCRIPTION & DIMENSIONS	SPASSLY	DETAIL DRG	MATL. & SPEC.	REMARKS
NIL M	GROUP	ELECTRICAL	SUPERSEDES: NIL			
WEIGHT	FILE	D:\home\kojs\edts355\ls71105.prt				
NIL KG		TERMINAL BLOCK - X3			SCALE	SSE/ED
S.AREA						DD
NIL M²		FOR NON-AC EOG LHB TYPE COACHES				DRN
~~LENGTH / DIA~~						
NIL M		RAIL COACH FACTORY, KAPURTHALA			REFERENCE	NIL
~~WIDTH / THICK~~						
NIL M		रेलकोच फैक्टरी कपूरथला	IRS		PL NO.	NIL
HEIGHT						
NIL M		SSE/D&D		DY.CEE/D&D	DRG.NO.	LS71105
					ALT. NIL	SIZE A2 SHEET 1/1

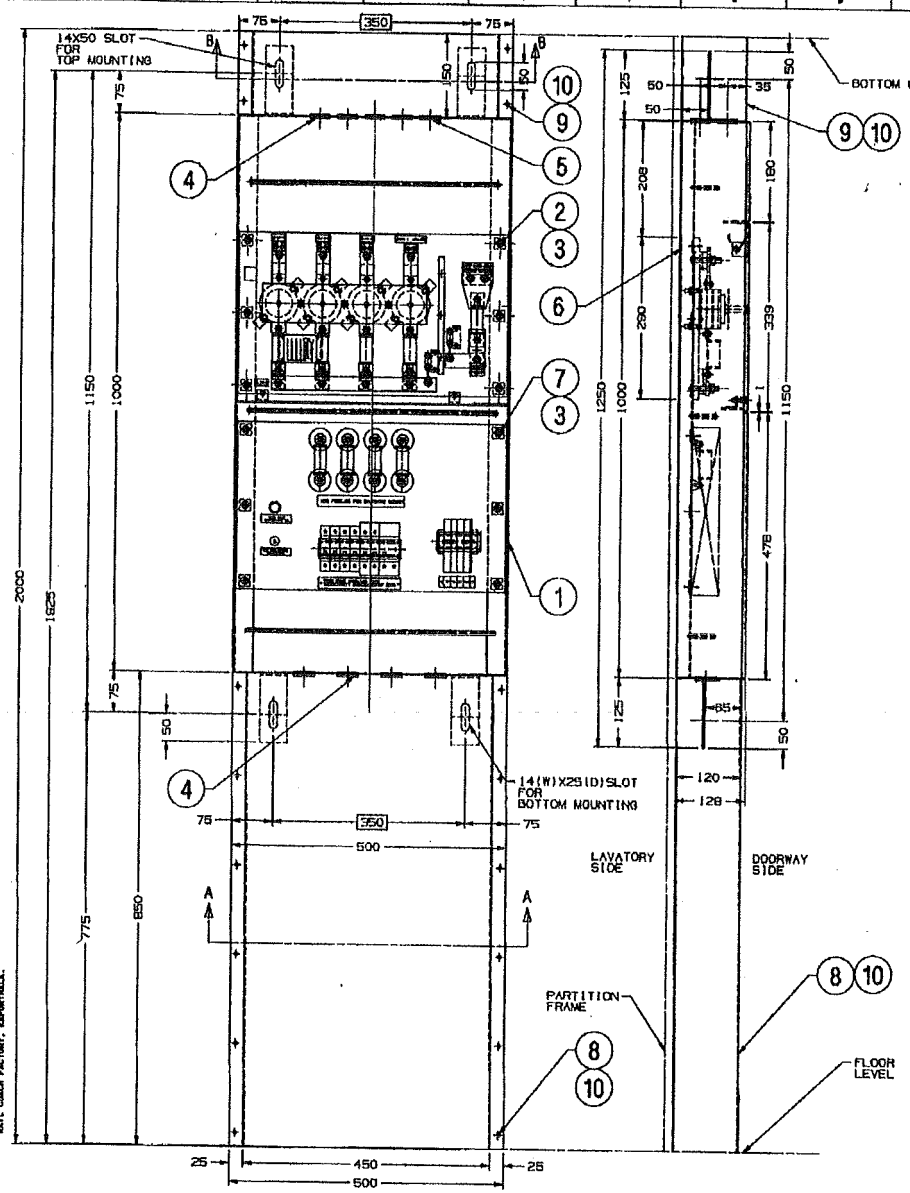

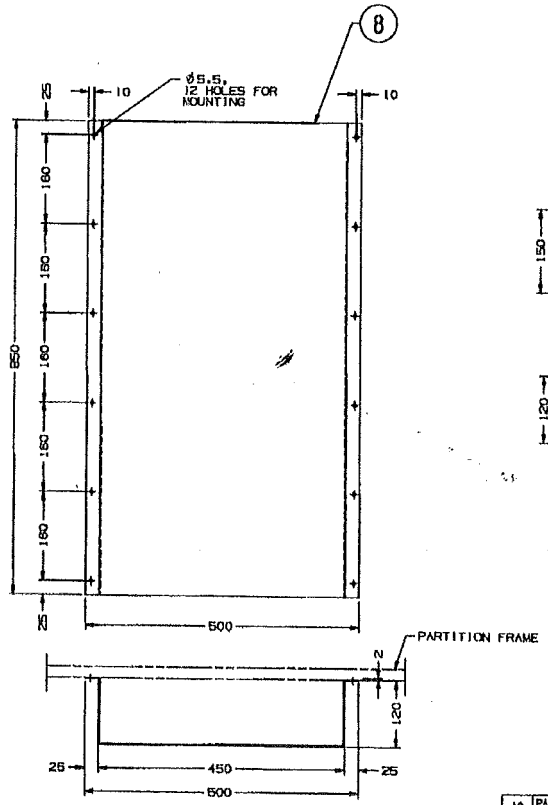

SECTION-AA

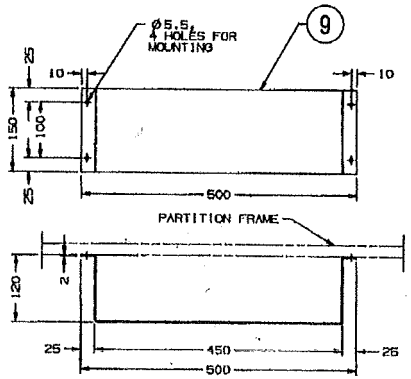

SECTION-BB

ITEM	DESCRIPTION & DIMENSIONS	QUANTY	DETAIL DRG	MATL. & SPEC.	REMARKS
10	PAN HEAD SELF TAPPING SCREW ST.4.8X16-F	16	IS: 7173-89 TY-F	NIL	NIL
9	UPPER CABLE COVER 2X731X150	1	NIL	IS: 513(LATEST)	NIL
8	LOWER CABLE COVER 2X731X850	1	NIL	IS: 513(LATEST)	NIL
7	FUSE AND TERMINAL PANEL	1	CC72082	NIL	NIL
6	PVC LINING SHEET 490X290X1	1	NIL	PVC FIRE RETARDENT	NIL
5	GROMMET (A=25.4,E=1.9)	8	IS: 5270-69, TAB-1	NIL	NIL
4	GROMMET (A=19,E=1.9)	8	IS: 5270-69, TAB-1	NIL	NIL
3	COUNTER SUNK HEAD SCREW M6X20.6ALVD.	12	IS: 1365-73, 4.8,T-142	NIL	NIL
2	FUSE CUM ROTARY SWITH PANEL	1	CC72089	NIL	NIL
1	CUBICLE BOX COMPLETE	1	CC72063	NIL	NIL

WELD LENGTH	NIL M
WEIGHT	NIL KG
S.AREA	NIL M²
WEIGHT	NIL M
WEIGHT	NIL M

GROUP: ELECTRICAL
SUPERSEDES: NIL
FILE: pahd on '1bmx3800\elec'(Z:)\V7\NOD345\aksed2011\edts_355new\cc72081new.prt

LOW VOLTAGE PANEL TO EDTS-355, REV-0,FOR LHB EOG NON-AC COACHES

SCALE | SHEET/SD | DRN | CHD

RAIL COACH FACTORY, KAPURTHALA

रेलकोच फैक्टरी कपूरथला IRS

SEE/DAB | BY/CLE/DAB

PL NO. NIL

DRG.NO. CC72081

ALT. NIL | SIZE A | SHEET 1/1

ALT.NO	ALT.DATE	ZONE	ALTERATION	AUTHORITY
NIL	NIL	NIL	NIL	NIL

3. ITEM-8,9 & 10 ARE TO BE SUPPLIED LOOSE AND BE FITTED ON COACH.
2. FRAMED DIMENSIONS ARE TO BE STRICTLY ADHERED TO.
1. ALL DIMENSIONS ARE IN MM.
NOTE:-

ANY MANUAL ALTERATION SHALL AUTOMATICALLY RENDER THIS DRAWING INVALID.

FOR UNTOLERANCED DIMENSIONS REFER M060006

DETAIL DRGS STARTING WITH "LI" ARE INTERNAL REFERENCE LISTS ONLY AND ARE NOT FOR ISSUE.

DATE OF FIRST ISSUE 08/02/2012

THIS DRAWING IS THE INTELLECTUAL PROPERTY OF RAIL COACH FACTORY, KAPURTHALA. THIS DRAWING SHOULD NOT BE REPRODUCED, ALTERED, USED FOR MANUFACTURING OF COMPONENTS AND/OR DISCLOSED WITHOUT PERMISSION FROM CHIEF DESIGN ENGINEER, RAIL COACH FACTORY, KAPURTHALA.

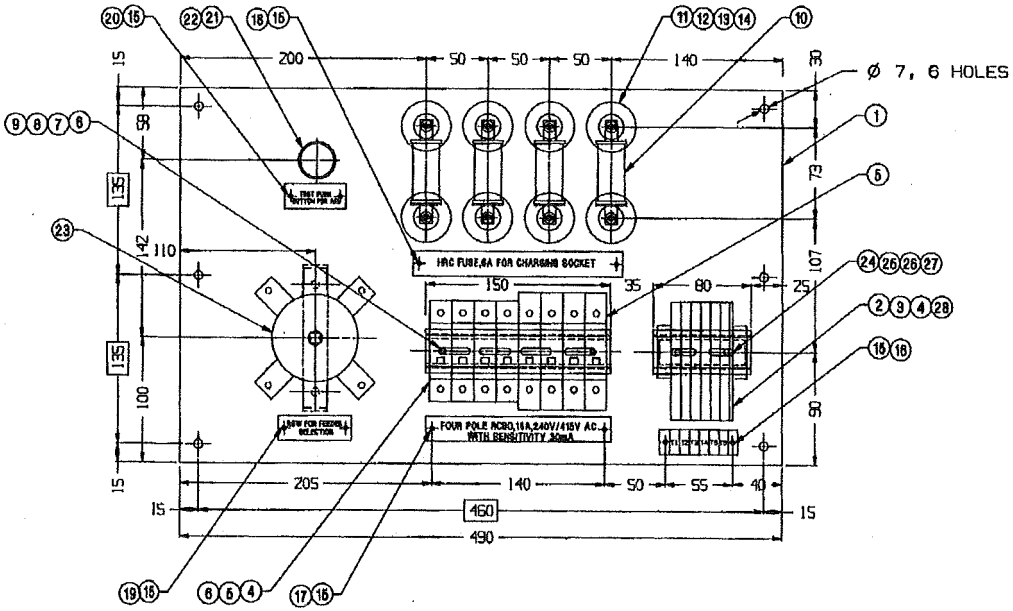

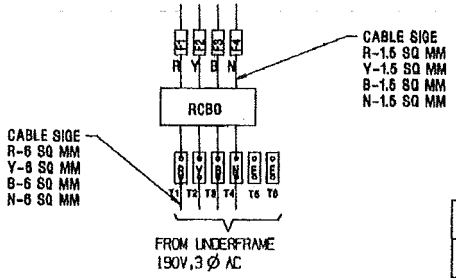

CONNECTION DIAGRAM

ALT.NO	ALT.DATE	ZONE	ALTERATIONS	AUTHORITY
a	10/02/2012	ALL - -	1.DRAWING MODIFIED. 2.RATING OF HRC FUSE TO ITEM NO.10 CHANGED FOR 2A TO 6A. 3.DETAIL DRG.FOR ITEM NO.23 CHANGED FROM BCM123 TO BCM138.	DIC.NO. ED120001

ITEM	DESCRIPTION & DIMENSIONS	QP/ASSLY	DETAIL DRG	MATL. & SPEC.	REMARKS
23	ROTARY SWITCH 16A,250V AC/DC, ,2-WAY WITH-OFF (WITHOUT KNOB)	1	CAT.NO. BCM138	NIL	OF M/S KEYCEE OR EQUIVALENT SALZER MAKE
22	CONTACT MECHANISM WITH 1NO+1NC	1	CAT.NO. 3SB1400-0A	NIL	OF SIEMENS OR EQUIVALENT GE/GSCMAKE
21	PUSH BUTTON.NORMAL ACTUATOR WITH PLASTIC FRONT RING & HOLDER COLOUR 'GREEN'	1	CAT.NO. 3SB1200-0AE01	NIL	OF SIEMENS OR EQUIVALENT GE/GSCMAKE
20	LEGAND PLATE 1X20X50 (TEST PUSH BUTTON FOR AEL)	1	NIL	IS: 737-74, 19000-H2	BRIGHT * ANNODISED
19	LEGAND PLATE 1X20X60 (RSW FEEDER SELECTION)	1	NIL	IS: 737-74, 19000-H2	BRIGHT * ANNODISED
18	LEGAND PLATE 1X20X170 (HRC FUSE)	1	NIL	IS: 737-74, 19000-H2	BRIGHT * ANNODISED
17	LEGAND PLATE 1X20X150 (FOUR POLE RCBO)	1	NIL	IS: 737-74, 19000-H2	BRIGHT * ANNODISED
16	LEGAND PLATE 1X20X64 (T1,T2,T3,T4,T5 & T6)	1	NIL	IS: 737-74, 19000-H2	BRIGHT * ANNODISED
15	SNAP HEAD RIVET, Ø 2X6	10	IS: 2907-64, T-2,FIG-1	IS: 740-77, 64490	NIL
14	PLAIN WASHER Ø 5	8	IS3063-94 T-1,TYPE-B	NIL	NIL
13	SPRING WASHER M5	8	IS3063-94 T-1,TYPE-B	NIL	NIL
12	INSULATING SPACER	8	NOVAFLEX/ BINAME	NIL	OR ANY OTHER RCF APPROVED MAKE
11	CHEESE HEAD SCREW M5X20,GALVD.	8	IS: 1366-82, 4.8,TAB-1	NIL	NIL
10	HRC FUSE 6A (BOLTED CONNECTIONS)	4	NIL	IS: 13703-93(PT-II) 3NW (1A OF SIEMENS/GS/ GE/ABB MAKE	NIL
9	PLAIN WASHER 5.5,GALVD.	2	IS: 2016-67, T3,TY-B	NIL	NIL
8	SPRING WASHER M5,GALVD.	2	IS: 3063-94, TY-B	NIL	NIL
7	CHEESE HEAD SCREW M5X16,GALVD.	2	IS: 1366-82, 4.8,TAB-1	NIL	NIL
6	DIN 35 RAIL FOR TERMINAL BLOCKS, L=150MM	1	CAT.NO. 210-162	NIL	OF M/S WAGO OR EQUIVALENT APPROVED MAKE
5	FOUR POLE RCBO,16A,240V/415V AC WITH SENSITIVITY 30mA	1	CAT.NO. 6033-95	NIL	OF M/S LEGRAND OR EQUIVALENT APPROVED MAKE
4	SCREWLESS END STOP FOR DIN 35 RAIL	1	CAT.NO. 249-117	NIL	OF M/S WAGO OR EQUIVALENT APPROVED MAKE
3	END AND INTERMEDIATE PLATE	1	CAT.NO. 283-308	NIL	OF M/S WAGO OR EQUIVALENT APPROVED MAKE
2	3-CONDUCTOR THROUGH TERMINAL BLOCK (T1,T2,T3 & T4)	4	CAT.NO. 282-681	NIL	OF M/S WAGO OR EQUIVALENT APPROVED MAKE
1	BASE PLATE FOR FUSE AND TERMINAL PANEL 3.25X490X300	1	IS: 513-94	NIL	NIL
28	3-CONDUCTOR GROUND (EARTH) TERMINAL BLOCK (T5 & T6)	2	CAT.NO. 282-687	NIL	OF M/S WAGO OR EQUIVALENT APPROVED MAKE
27	PLAIN WASHER 5.5,GALVD.	2	IS: 2016-67, T3,TY-B	NIL	NIL
26	SPRING WASHER M5,GALVD.	2	IS: 3063-94, TY-B	NIL	NIL
25	CHEESE HEAD SCREW M5X16,GALVD.	2	IS: 1366-82, 4.8,TAB-1	NIL	NIL
24	DIN 35 RAIL FOR TERMINAL BLOCKS L=80MM	1	CAT.NO. 210-162	NIL	OF M/S WAGO OR EQUIVALENT APPROVED MAKE

WELD LENGTH	NIL M
WEIGHT	NIL KG
S.AREA	NIL M²
~~LENGTH / DIA~~	NIL M
~~WIDTH / THICK~~	NIL M
HEIGHT	NIL M

GROUP: ELECTRICAL

SUPERSEDES: CC72082 ALT NIL

FILE: pand on 'ibmx3800\elec'(Z:)\VIN00345\sked2011\edts_355new\cc72082a.prt

FUSE AND TERMINAL PANEL TO EDTS-355
REV-0,FOR LHB EOG NON-AC COACHES

RAIL COACH FACTORY, KAPURTHALA

रेलकोच फैक्टरी कपूरथला

IRS

SEE/D&D

DY.CEE/D&D

SCALE | SSE/ED | CHD | DRN | LOGN

REF.DRG.No. NIL

PL NO. NIL

DRG.NO. CC72082

ALT. a | SIZE A2 | SHEET 1/1

3. FRAMED DIMENSIONS ARE TO BE STRICTLY ADHERED TO.
* 2. LETTERS OF 3MM HEIGHT SHALL BE DEEP ETCHED AND NEATLY APPLIED WITH BLACK ENAMEL PAINT.
1. ALL DIMESIONS IN MM.
NOTE:-

DETAIL DRGS STARTING WITH "L1" ARE INTERNAL REFERENCE LISTS ONLY AND ARE NOT FOR ISSUE

ANY MANUAL ALTERATION SHALL AUTOMATICALLY RENDER THIS DRAWING INVALID.

FOR UNTOLERANCED DIMENSIONS REFER MDG0008 | DATE OF FIRST ISSUE 10/02/2012

THIS DRAWING IS THE INTELLECTUAL PROPERTY OF R.A.L. COACH FACTORY, KAPURTHALA. THIS DRAWING SHOULD NOT BE REPRODUCED, ALTERED, USED FOR MANUFACTURING OF COMPONENTS, SOLD OR TRANSFERRED WITHOUT PERMISSION FROM CHIEF DESIGN ENGINEER, R.A.L. COACH FACTORY, KAPURTHALA.

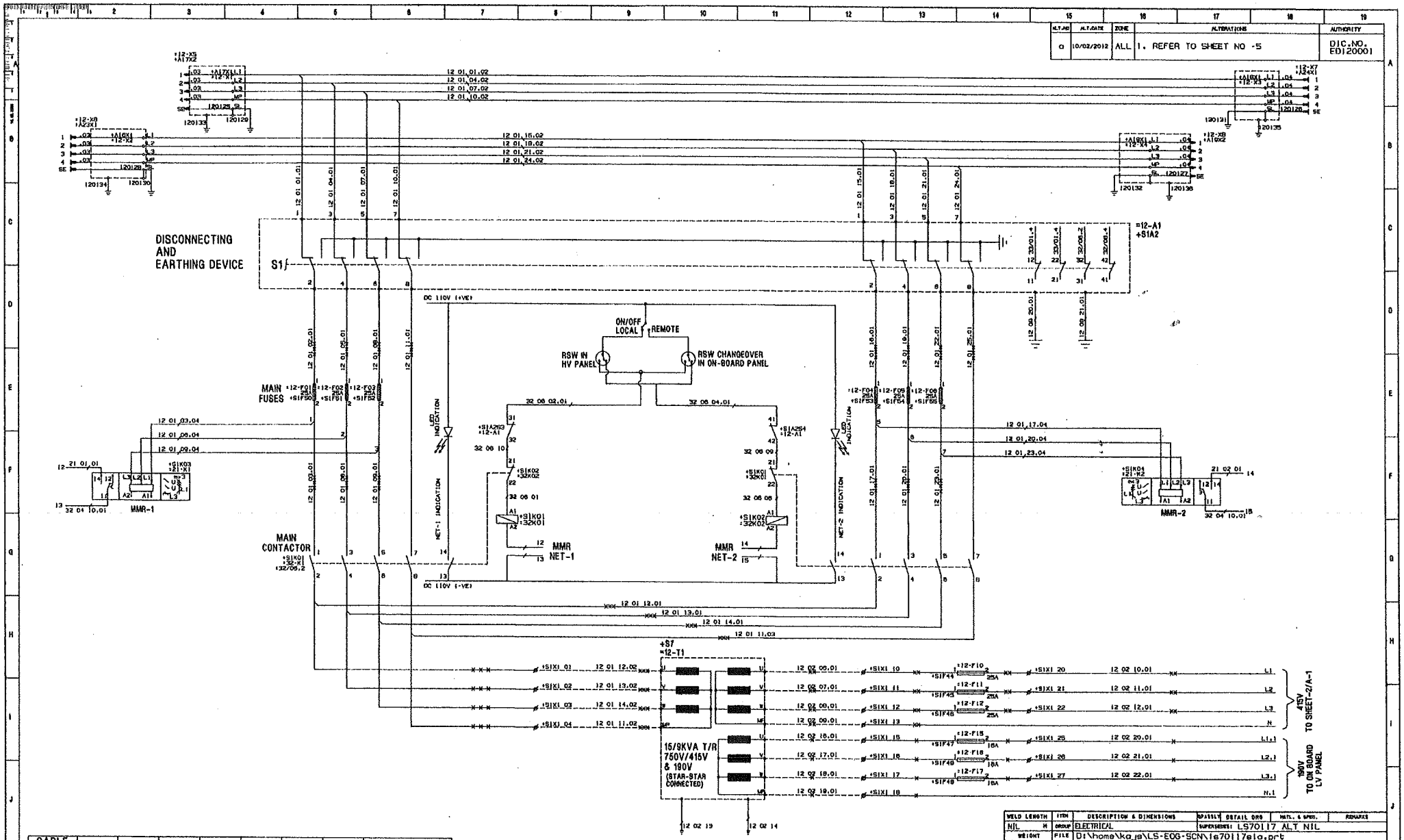

ALT.NO	ALT.DATE	ZONE	ALTERATIONS	AUTHORITY
0	10/02/2012	ALL	1. REFER TO SHEET NO -5	DIC.NO. ED120001

CABLE SIZE	25SQMM	16SQMM	10SQMM	6SQMM	4SQMM	2.5SQMM	1.5SQMM	
SYMBOL	~~XXXX~~	~~XXX~~	~~XX~~	~~X~~	~~///~~	~~//~~	~~/~~	THM WALLED FLEXIBLE ELASTOMERIC CABLES WITH COPPER CONDUCTOR TO RDSO SPEC NO.ELRS/ SPEC/ELC/0019,REV-2.

ANY MANUAL ALTERATION SHALL AUTOMATICALLY RENDER THIS DRAWING INVALID.

FOR UNTOLERANCED DIMENSIONS REFER MDG0008

DETAIL DRGS STARTING WITH "LI" ARE INTERNAL REFERENCE LISTS ONLY AND ARE NOT FOR ISSUE.

DATE OF FIRST ISSUE 10/02/2012

WELD LENGTH	ITEM	DESCRIPTION & DIMENSIONS	DETAIL DRG	MATL. & SPEC.	REMARKS
NIL	GROUP	ELECTRICAL	LS70117 ALT NIL		
WEIGHT	FILE	D:\home\kaja\LS-EOG-SCN\ls70117elo.prt			
NIL		HIGH VOLTAGE (750V) WIRING DIAGRAM OF SWITCH BOARD CABINET (FOR LHB EOG NON-AC CHACHES)			
NIL		RAIL COACH FACTORY, KAPURTHALA		NIL	
NIL		रेलकोच फैक्टरी कपूरथला IRS		PL NO. NIL	
NIL				DRG.NO. LS70117	

ALT.NO	ALT.DATE	ZONE	ALTERATIONS	AUTHORITY
a	10/02/2012	ALL	1. REFER TO SHEET NO -5	DIC.NO. E0120001

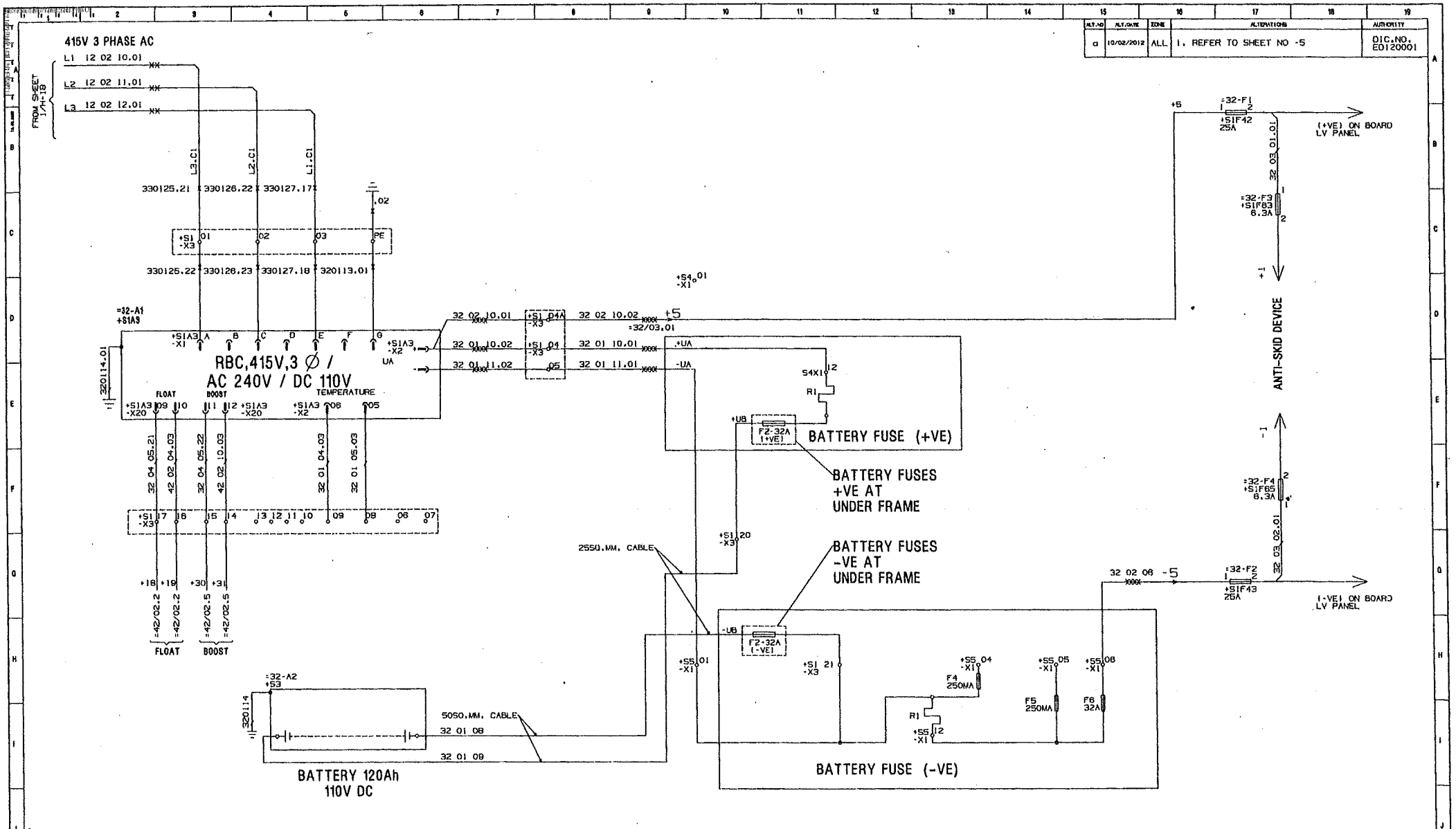

WELD LENGTH	ITEM	DESCRIPTION & DIMENSIONS	DRASSLY	DETAIL DRG	MATL. & SPEC.	REMARKS
NIL M	GROUP	ELECTRICAL	SUPERSEDES:	LS70117 ALT NIL		
WEIGHT	FILE	\\ibmx3800\elec\pand\ls70117a2a.prt				
NIL KG		BATTERY DISTRIBUTION			SCALE	SSE/ED
S.AREA		WIRING DIAGRAM OF SWITCH BOARD CABINET				CHD
NIL M²		(FOR LHB EOG NON-AC CHACHES)				DRN
LENGTH/DIA						
NIL M		RAIL COACH FACTORY, KAPURTHALA			REFERENCE	NIL
WIDTH/THICK.		रेल कोच फैक्टरी कपूरथला	IRS		PL NO.	NIL
NIL M					DRG.NO.	LS70117
HEIGHT		SEE/D&D		DY.CEE/D&D	ALT. a	SIZE A4 SHEET 2/5
NIL M						

ANY MANUAL ALTERATION SHALL AUTOMATICALLY RENDER THIS DRAWING INVALID.

FOR UNTOLERANCED DIMENSIONS REFER MDG0008

DETAIL DRGS STARTING WITH "LI" ARE INTERNAL REFERENCE LISTS ONLY AND ARE NOT FOR ISSUE.

DATE OF FIRST ISSUE 10/02/2012

ALT.NO	ALT.DATE	ZONE	ALTERATIONS	AUTHORITY
a	10/02/2012	ALL	1. REFER TO SHEET NO -5	DIC.NO. E0120001

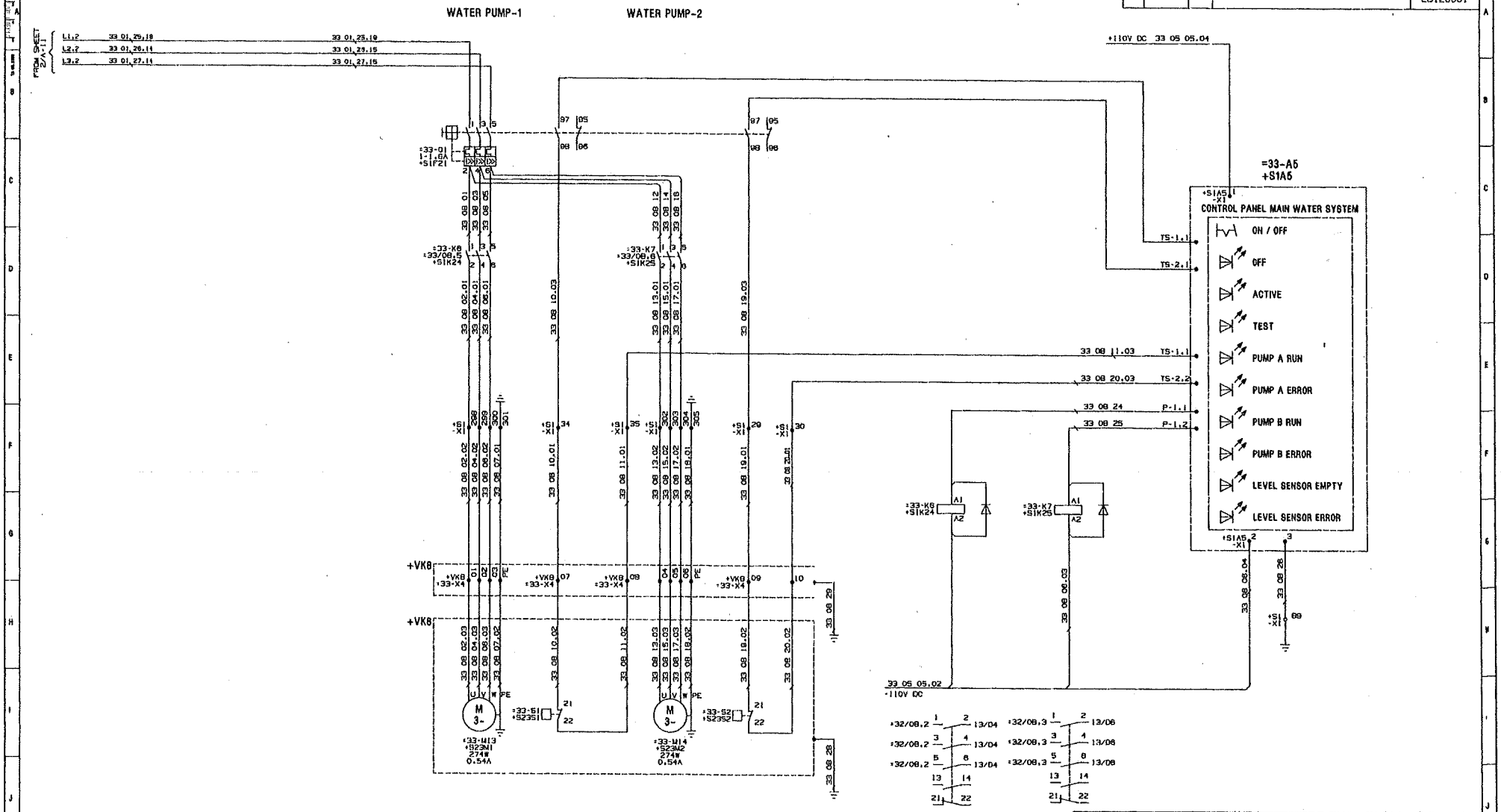

WELD LENGTH	ITEM	DESCRIPTION & DIMENSIONS	DRAWN/ASSLY	DETAIL DRG	MATL. & SPEC.	REMARKS
NIL M	GROUP	ELECTRICAL	SUPERSEDES:	LS70117 ALT NIL		
WEIGHT	FILE	D:\home\ka_js\LS-EOG-SCN\ls70117e3a.prt				
NIL KG		WATER PUMP WIRING DIAGRAM OF SWITCH BOARD CABINET (FOR LHB EOG NON-AC COACHES)	SCALE	SEE/CKD		
S.AREA				DRD		
NIL M²				DRN		
LENGTH/DIA.		RAIL COACH FACTORY, KAPURTHALA				
NIL M				SEE/DRG.NO.	NIL	
WIDTH/THICK.		रेलकोच फैक्टरी कपूरथला IRS		PL NO.	NIL	
NIL M				DRG.NO.	LS70117	
HEIGHT						
NIL M		SEE/CKD	DY.CEE/DLD	ALT. a	SIZE A4	SHEET 3/5

ANY MANUAL ALTERATION SHALL AUTOMATICALLY RENDER THIS DRAWING INVALID.
FOR UNTOLERANCED DIMENSIONS REFER MD00008

DETAIL DRGS STARTING WITH "LI" ARE INTERNAL REFERENCE LISTS ONLY AND ARE NOT FOR ISSUE.

DATE OF FIRST ISSUE 09/01/2012

ALT.NO	ALT.DATE	ZONE	ALTERATIONS	AUTHORITY
0	10/02/2012	ALL	1. REFER TO SHEET NO -5	DIC.NO. ED120001

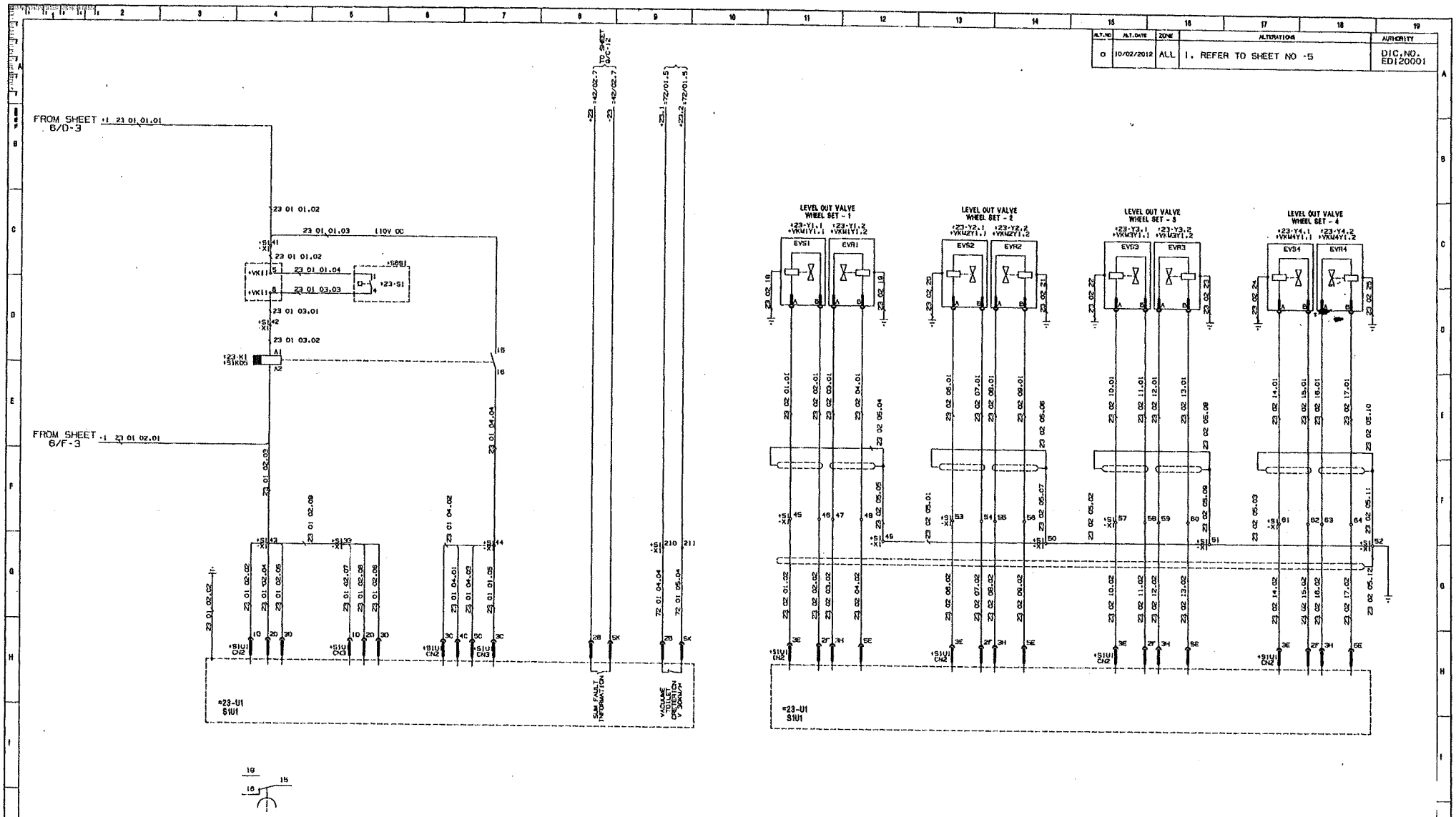

WELD LENGTH	ITEM	DESCRIPTION & DIMENSIONS	DASSLY	DETAIL DRG	MATL. & SPEC.	REMARKS
NIL M	GROUP	ELECTRICAL	SUPERSEDES	LS70117 ALT NIL		
WEIGHT	FILE	D:\home\ko_js\LS-EOG-SCN\ls70117s4a.prt				
NIL KG		ANTI-SKID DEVICE			SCALE	SIZE/ED
S.AREA		WIRING DIAGRAM OF SWITCH BOARD CABINET				DRN
NIL M²		(FOR LHB EOG NON-AC COACHES)				
LENGTH/DIA						
NIL M		RAIL COACH FACTORY, KAPURTHALA			REFERENCE NIL	
WIDTH/THICK.						
NIL M		रेलकोच फैक्टरी कपूरथला IRS			PL NO.	NIL
HEIGHT					DRG.NO.	LS70117
NIL M		SEE/D40	DY.CEE/D40		ALT. 0	SIZE A4 SHEET 1/5

ANY MANUAL ALTERATION SHALL AUTOMATICALLY RENDER THIS DRAWING INVALID.

FOR UNTOLERANCED DIMENSIONS REFER MDG0008

DETAIL DRGS STARTING WITH "LI" ARE INTERNAL REFERENCE LISTS ONLY AND ARE NOT FOR ISSUE.

DATE OF FIRST ISSUE 10/02/2012

ALT.NO	ALT.DATE	ZONE	ALTERATIONS	AUTHORITY
a	10/02/2012	ALL	1.DRG.MODIFIED AS PER RDSO LETTER NO.EL/0.6.5/LHB/EOG NON-AC COACHES DATED-09.02.2012. 2.RATING OF FUSES NO.+S1F50 TO +S1F55 CHANGED FROM 20A TO 25A. 3.VOLT METER +S1P2 & S1P3 DELETED. 4.RSW +S1S13 & +S1S14 DELETED. 5.FUSES +S1F590,+S1F591,+S1F593, +S1F594,+S1F595 & +S1F596 DELETED. 6.INSULATION CONTROL,110V AC +S1A0 DELETED. 7.THIN WALLED FLEXIBLE ELASTOMERIC CABLES WITH COPPERCONDUCTOR TO RDSO SPEC NO. ELRS/SPEC/ELC/0018,REV-2, ADVISED.	DIC.NO. ED120001

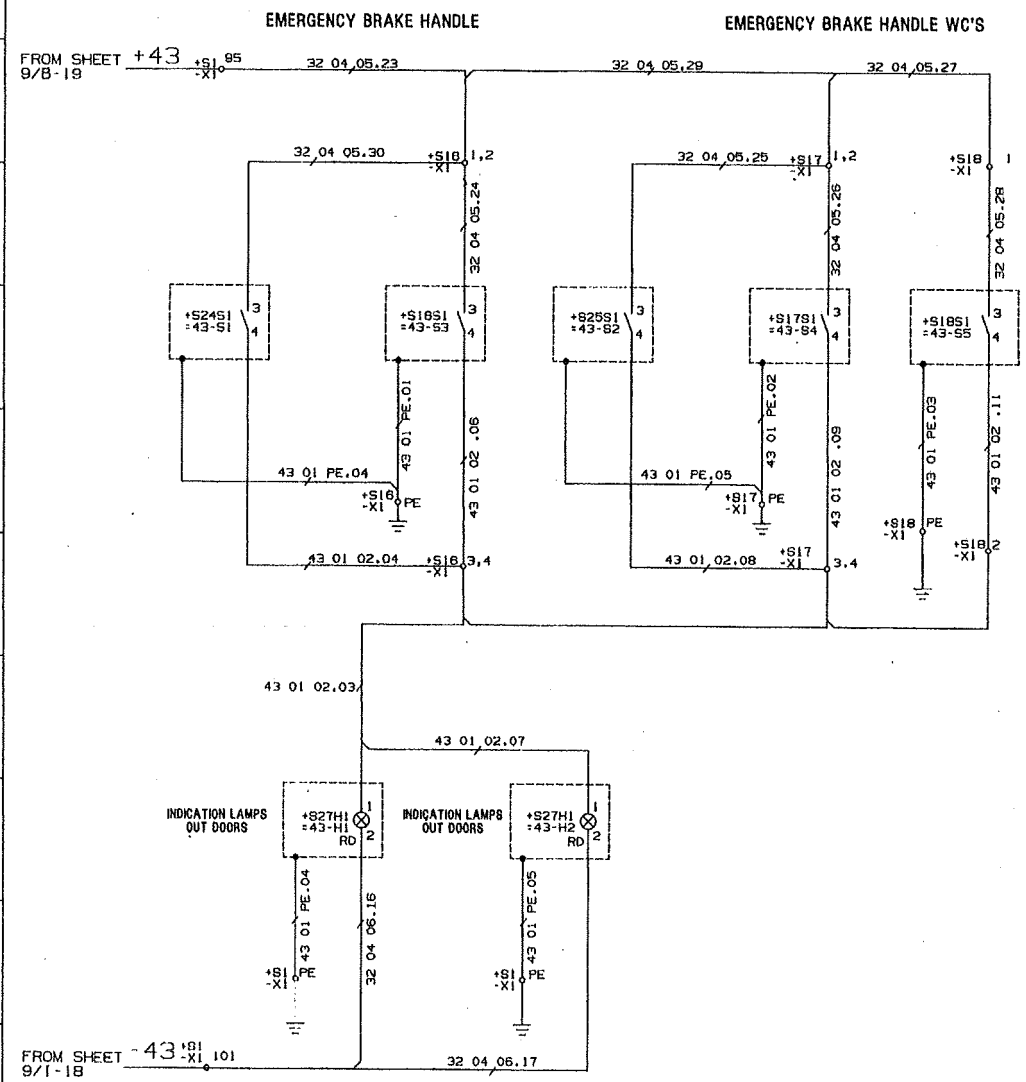

WELD LENGTH	ITEM	DESCRIPTION & DIMENSIONS	REPRODUCT	DETAIL DRG	PRTL. & SPEC.	REMARKS
NIL M	GROUP	ELECTRICAL	SUPERSEDES:	LS70117 ALT NIL		
WEIGHT	FILE	D:\home\ka_js\LS-EOG-SCN\ls70117e5a.prt				
NIL KG		E-BRAKE & SANITRY SYSTEM WIRING DIAGRAM OF SWITCH BOARD CABINET (FOR LHB EOG NON-AC COACHES)	SCALE	SSE/SD		
S.AREA NIL M²				DID		
LENGTH/DIA NIL M		RAIL COACH FACTORY, KAPURTHALA		DRN		
WIDTH/THICK. NIL M		रेलकोच फैक्टरी कपूरथला IRS	REFERENCE	NIL		
HEIGHT NIL M			PL NO.	NIL		
		SEE/DAD DY.CEE/DAD	DRG.NO.	LS70117		
			ALT.	a	SIZE A	SHEET 5/5

ANY MANUAL ALTERATION SHALL AUTOMATICALLY RENDER THIS DRAWING INVALID.

FOR UNTOLERANCED DIMENSIONS REFER MD00006

DETAIL DRGS STARTING WITH "LI" ARE INTERNAL REFERENCE LISTS ONLY AND ARE NOT FOR ISSUE.

DATE OF FIRST ISSUE 10/02/2012

Sr. No.	Item	Term function Technical data	Drawing No	Manufacture supplier	Place of install-ation
		HIGH VOLTAGE CUBICLE			
1	12 F01	High voltage fuse (with holder) net1 Gr.00C 1000V/25A AC; aB	2038603 2138601	Siba/EFEN/ Ferraz/ETI/ Siemens/Bussmann/ Schneider/GE/L&T	S1F50
2	12 F02	High voltage fuse (with holder) net1 Gr.00C 1000V/25A AC; aB	2038603 2138601	Siba/EFEN/ Ferraz/ETI/ Siemens/Bussmann/ Schneider/GE/L&T	S1F51
3	12 F03	High voltage fuse (with holder) net1 Gr.00C 1000V/25A AC; aB	2038603 2138601	Siba/EFEN/ Ferraz/ETI/ Siemens/Bussmann/ Schneider/GE/L&T	S1F52
4	12 F04	High voltage fuse (with holder) net2 Gr.00C 1000V/25A AC; aB	2038603 2138601	Siba/EFEN/ Ferraz/ETI/ Siemens/Bussmann/ Schneider/GE/L&T	S1F53
5	12 F05	High voltage fuse (with holder) net2 Gr.00C 1000V/25A AC; aB	2038603 2138601	Siba/EFEN/ Ferraz/ETI/ Siemens/Bussmann/ Schneider/GE/L&T	S1F54
6	12 F06	High voltage fuse (with holder) net2 Gr.00C 1000V/25A AC; aB	2038603 2138601	Siba/EFEN/ Ferraz/ETI/ Siemens/Bussmann/ Schneider/GE/L&T	S1F55
7	12 F10	Low voltage fuse (with holder) transformer (sec.) Gr.00 500V/25A GL/GG	03912,03760 of M/s Wohner	Siba/EFEN/ Ferraz/ETI/ Siemens/Bussmann/ Schneider/GE/L&T	S1F44
8	12 F11	Low voltage fuse (with holder) transformer (sec.) Gr.00 500V/25A GL/GG	03912,03760 of M/s Wohner	Siba/EFEN/ Ferraz/ETI/ Siemens/Bussmann/ Schneider/GE/L&T	S1F45
9	12 F12	Low voltage fuse (with holder) transformer (sec.) Gr.00 500V/25A GL/GG	03912,03760 of M/s Wohner	Siba/EFEN/ Ferraz/ETI/ Siemens/Bussmann/ Schneider/GE/L&T	S1F46
10	12 F13	Fuse 5 x 20mm (fuse clamp) net-1 control 1 amps	282-122(clamp)	Wago/Wickmann/ RS/ Ferraz/Phoenix /Weidmuller	-
11	12 F14	Fuse 5 x 20mm (fuse clamp) net-1 control 1 amps	282-122(clamp)	Wago/Wickmann/ RS/ Ferraz/Phoenix /Weidmuller	-
12	12 F15	Low voltage fuse (with holder) transformer (sec.) Gr.00 500V/16A GL/GG	03909,03760 of M/s Wohner	Siemens/ WOHNER-ITALWEBER/ Ferraz/Bussmann/ Schneider/GE/L&T	S1F47
13	12 F16	Low voltage fuse (with holder) transformer (sec.) Gr.00 500V/16A GL/GG	03909,03760 of M/s Wohner	Siemens/ WOHNER-ITALWEBER/ Ferraz/Bussmann/ Schneider/GE/L&T	S1F48
14	12 F17	Low voltage fuse (with holder) transformer (sec.) Gr.00 500V/16A GL/GG	03909,03760 of M/s Wohner	Siemens/ WOHNER-ITALWEBER/ Ferraz/Bussmann/ Schneider/GE/L&T	S1F49
15	12 A1	Disconnecting and earthing device,8 pole,2 way, no-OFF on load,63A 750V AC (1000V insulation), 2NO+2NC with heavy handle and pad locking arrgt. In earth position, mounted in a stainless steel enclosure suitable for AC23 duty conforming to IS:13947/IEC947	M137.0827407 of M/s Schaltbau or cat. No. 73342SLB321 O6B of M/s L&T	Schaltbau L&T	S1A2
16	21 F01	Fuse fuse for voltage control 1A; 1.2kV	70 034 049/1 71 034 01	Siba/Wohner/ Ferraz/GE/Schneider/ Bussmann/L&T	S1F90

17	21 F02	Fuse fuse for voltage control 1A; 1.2kV	71 034 049/1 71 034 01		Siba/Wohner/ Ferraz/GE/Schneider/ Bussmann/L&T	S1F91
18	21 F03	Fuse fuse for voltage control 1A; 1.2kV	72 034 049/1 71 034 01		Siba/Wohner/ Ferraz/GE/Schneider/ Bussmann/L&T	S1F93
19	21 F04	Fuse fuse for voltage control 1A; 1.2kV	73 034 049/1 71 034 01		Siba/Wohner/ Ferraz/GE/Schneider/ Bussmann/L&T	S1F94
20	21 F05	Fuse fuse for voltage control 1A; 1.2kV	74 034 049/1 71 034 01		Siba/Wohner/ Ferraz/GE/Schneider/ Bussmann/L&T	S1F95
21	21 F06	Fuse fuse for voltage control 1A; 1.2kV	75 034 049/1 71 034 01		Siba/Wohner/ Ferraz/GE/Schneider/ Bussmann/L&T	S1F96
22	21 K01	Voltage phase control net1 3AC,750V, aux. Voltage 24-60V AC/DC	BD 9080		Dold/ Gavazzi/ABB	S1K03
23	21 K02	Voltage phase control net1 3AC,750V, aux. Voltage 24-60V AC/DC	BD 9080		Dold/ Gavazzi/ABB	S1K04
24	21 P01	item deleted	-		-	S1P2
25	21 P02	item deleted	-		-	S1P3
26	21 S01	item deleted	-		-	S1S13 (RSW-V1)
27	21 S02	item deleted	-		-	S1S143 (RSW-V2)
28	28 K01	Drop out delay time relay ARS time tron, UC 24...240V anti skid	2430 120 01		GE/ABB/Schielcher	S1K5
29	29 F01	Low voltage fuse (with holder) switch cabinet Gr.00 25A	03912,03760 of M/s Wohner		Siemens/ WOHNER- ITALWEBER/ Ferraz/Bussmann/ Schneider/GE/L&T	S1F42
30	30 F02	Low voltage fuse (with holder) switch cabinet Gr.00 25A	03912,03760 of M/s Wohner		Siemens/ WOHNER- ITALWEBER/ Ferraz/Bussmann/ Schneider/GE/L&T	S1F43
31	31 F03	Fuse 5 x 20mm (fuse clamp at the X1.2) anti skid device T6, 3A	282-128/281-418(clamp)		Wago/Wickmann/ RS/ Ferraz/Phoenix /Weidmuller	S1F63
32	32 F04	Fuse 5 x 20mm (fuse clamp at the X1.2) anti skid device T6, 3A	282-128/281-418(clamp)		Wago/Wickmann/ RS/ Ferraz/Phoenix /Weidmuller	S1F65
33	32 K01	Contactor LS 45K4.00 DC 110V net1,aux.contact HS8K11(2nos.) aux.contact HS7K10(1nos.) AC3; 750V RC Unit	-	-	AEG or equivalent of Siemens	S1K01
			AF 50-40-00 DC 110V RC5 CA5-22E	-	ABB or equivalent of Siemens/L&T/ Schneider	
34	32 K02	Contactor LS 45K4.00 DC 110V net1,aux.contact HS8K11(2nos.) aux.contact HS7K10(1nos.) AC3; 750V RC Unit	-	-	AEG or equivalent of Siemens	S1K02
			AF 50-40-00 DC 110V RC5 CA5-22E	-	ABB or equivalent of Siemens/L&T/ Schneider	

35	32 S01	Rotary switch with marking "I-0-II" net1-off-net2 (change over switch with 0-position 3-pole)	3SB3 000-0DA11 3SB3 901-0AW 3SB3 400-0A		Siemens L&T (SALZER) TEKNIC/ GE/KAYCEE	S1S02 (RSW-1)
36	33 Q1	Motor protective relay water pump MBS 25, 1-1.6 A with aux.. Contact HS9.11 and terminal block db	910-201-205 910-292-130 910-293-209		AEG	S1F21
					L&T/Group schneider/ABB	
			3RV1021 1AA10 +3RV 1901 1E		SIEMENS	
37	32 S07	Toggle switch 0-1 power supply on-off with socket and 2 NC	3SB3 000-2KA11 3SB3 901-0AC 3SB3 400-0D, 61006-S6-B19-600-FH-BB-OFF-ON		Siemens L&T (SALZER) TEKNIC SALZER	S1S01
38	32 S08	Rotary switch 3-pole, 2-way with OFF			Siemens SALZER Kaycee	
39	93 A1	item deleted	-		-	S1A6
40	93 F01	Fuse 5 x 20mm (fuse clamp at the X1.2) insulation control T2A	282-128/281-418(clamp)		Wago/Wickmann/ RS/Ferraz/Phoenix/ Weidmuller	S1F58
41	93 F02	Fuse 5 x 20mm (fuse clamp at the X1.2) insulation control T2A	282-128/281-413(clamp)		Wago/Wickmann/ RS/Ferraz/Phoenix/ Weidmuller	S1F59
42	X1	Terminal block for High voltage Box				S1X1.1
43	33 K06	Auxiliary contactor SH5.31, DC110V with diode water pump 110V DC	SH5.31,DC110V		AEG	S1K24
			TKC631-Z,110VDC	GJH1213061R6312	ABB	
				3RH1131-BF40	Siemens/L&T/ Schneider	
				3RT1916-1DG00		
44	33 K07	Auxiliary contactor SH5.31, DC110V with diode water pump 110V DC	SH5.31,DC110V		AEG	S1K25
			TKC631-Z,110VDC	GJH1213061R6312	ABB	
				3RH1131-BF40	Siemens/L&T/ Schneider	
				3RT1916-1DG00		
		REGULATED BATTERY CHARGER CUBICLE				
45	X3	Terminal block X3	Drawing no. LS70105		Wago/Phoenix/ Weidmuller	S1X3
		ON-BOARD LV CUBICLE				
46		RCBO suitable for 10 amps , 30 mAmps			Siemens MDS/Legrand	
47		Rotary switch panel for Non-AC coaches	CC72399		RDSO/RCF approved sources	
48		Rotary Switch for Mobile charging socket			Siemens SALZER Kaycee	
49		Rotary Switch for feeder changeover 16 Amps 6 way with off			Siemens SALZER Kaycee	
		MISCELLANEOUS				
50		PVC alleys	L&T/AKG			
51		Halogen free electron beam irradiated cables of various sizes	RDSO specification no. ELRS/SPEC/ELC/0019, Rev-2		RDSO/RCF approved sources	
52		Multiple accessories like locks, hinges, handles etc.	Dirac/Hafele/equivalent imported make			
53		Computer Generated Ferrules	Tyco/Phoenix/Panduit			
54		Cable Jackets	PMA Jack,Fedral Mogul, Werner Hahm		PMA/ Fedral Mogul/ , Werner Hahm	
		Note: 1.Inspecting agency will check all the components above and maintain record for future reference. No deviation in above will be acceptable. 2.Calibration certificate of measuring instruments i.e voltmeter,ammeter to be submitted during inspection. 3.Coloured heat shrinkable sleeves shall be provided as per phase for easy identification.				

Annexure- B

TERMINAL BLOCK IN HV PANEL

S1 X1	1	283-901	TRANSFORMER INPUT
	2	283-901	
	3	283-901	
	4	283-901	
	5		
	6		
	7		
	8		
	9		
	10	284-681	TRANSFORMER OUTPUT 415V
	11	284-681	TRANSFORMER OUTPUT 415V
	12	284-681	TRANSFORMER OUTPUT 415V
	13	284-681	TRANSFORMER OUTPUT 415V
	14	284-681	
	15	284-681	TRANSFORMER OUTPUT 190 V
	16	284-681	TRANSFORMER OUTPUT 190 V
	17	284-681	TRANSFORMER OUTPUT 190 V
	18	284-681	TRANSFORMER OUTPUT 190 V
	19	284-681	
	20	284-681	BATTERY CHARGER INPUT
	21	284-681	BATTERY CHARGER INPUT
	22	284-681	BATTERY CHARGER INPUT
	23	284-681	
	24	284-681	
	25	284-681	MOBILE CHARGING
	26	284-681	MOBILE CHARGING
	27	284-681	MOBILE CHARGING
	30	280-833	DC +VE
	31	280-833	DC +VE
	32	280-833	DC -VE
	33	280-833	DC -VE
	34	280-833	pump control
	35	280-833	pump control
	41	280-833	anti skid
	42	280-833	anti skid
	43	280-833	anti skid
	44	280-833	anti skid
	45	280-833	anti skid
	46	280-833	anti skid
	47	280-833	anti skid
	48	280-833	anti skid
	49	280-833	anti skid
	50	280-833	anti skid
	51	280-833	anti skid
	52	280-833	anti skid
	53	280-833	anti skid
	54	280-833	anti skid
	55	280-833	anti skid
	56	280-833	anti skid
	57	280-833	anti skid
	58	280-833	anti skid
	59	280-833	anti skid
	60	280-833	anti skid
	61	280-833	anti skid

62	280-833	anti skic
63	280-833	anti skic
298	280-833	PUMP
299	280-833	PUMP
300	280-833	PUMP
301	PE	PUMP
302	280-833	PUMP
303	280-833	PUMP
304	280-833	PUMP
305	PE	PUMP

Amendment-1 to specification no. EDTS-355, Rev-01 for Set of Panels for LHB EOG Non-AC coaches

Sr. No.	Clause No.	Existing	Revised
1	4.24.3	The voltmeter and necessary rotary switches as indicated in the drawing shall be mounted on a plate welded or screwed to the top frame as indicated in the drawing	Rotary switches as indicated in the drawing shall be mounted on a plate welded or screwed to the top frame as indicated in the drawing
2	4.27 (new clause added)	----	Regulated Battery Charger (excluding top openings) and HV Panel shall be IP65 protected as per IS:13947 (latest edition). Suitable gaskets shall be provided on the lower openings.
3	5.4 (Sr.No.11) (test added)	----	Test for verification of degree of protection as per IS:13947 (latest edition) (Applicable for type test only)
4	8.0 (Sr.No.1)	LS71103 (HV Cubicle)	LS71103 Alt. `a' (3 sheets) (HV Cubicle)
5	8.0 (Sr.No.2)	LS71104 (Regulated battery Charger Cubicle)	LS71104 Alt. `a' (3 sheets) (Regulated battery Charger Cubicle)
6	Annexure-A (BOM) Sr.No.48	Rotary Switch for Mobile charging Socket	Rotary Switch for Mobile charging Socket 10A, 4 Pole ON/OFF
7	Annexure-A (BOM) Sr.No.49	Rotary Switch for Feeder Changeover 16A, 6 way with OFF	Rotary Switch for Feeder Changeover 16A, 2 way with OFF

- RCBO shall be shifted to the HV Panel and wiring shall be modified accordingly. ON/OFF Rotary Switch for Mobile charging Socket shall be mounted in the space released by RCBO (Ref. drawing no. CC72082 Alt.`a').

EDTS-355	01	1	23.2.12				1 of 1
Spec. No.	Rev	Am	Date	SSE/CAD	SEE/D&D	Dy.CEE/D&D	Page

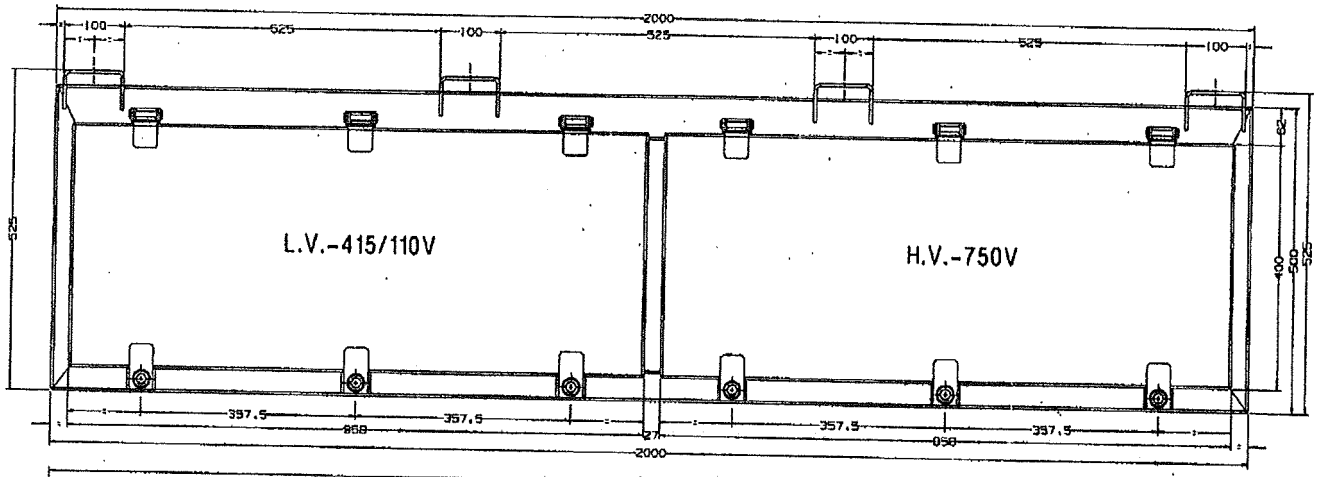

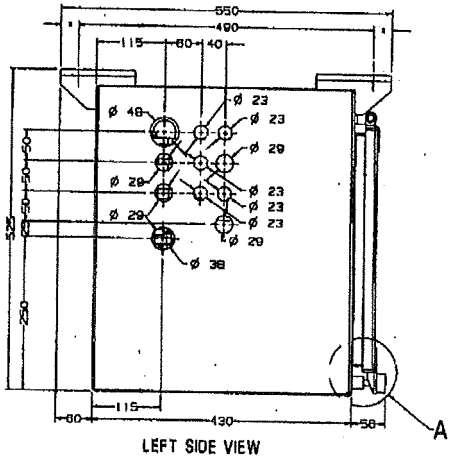

LEFT SIDE VIEW

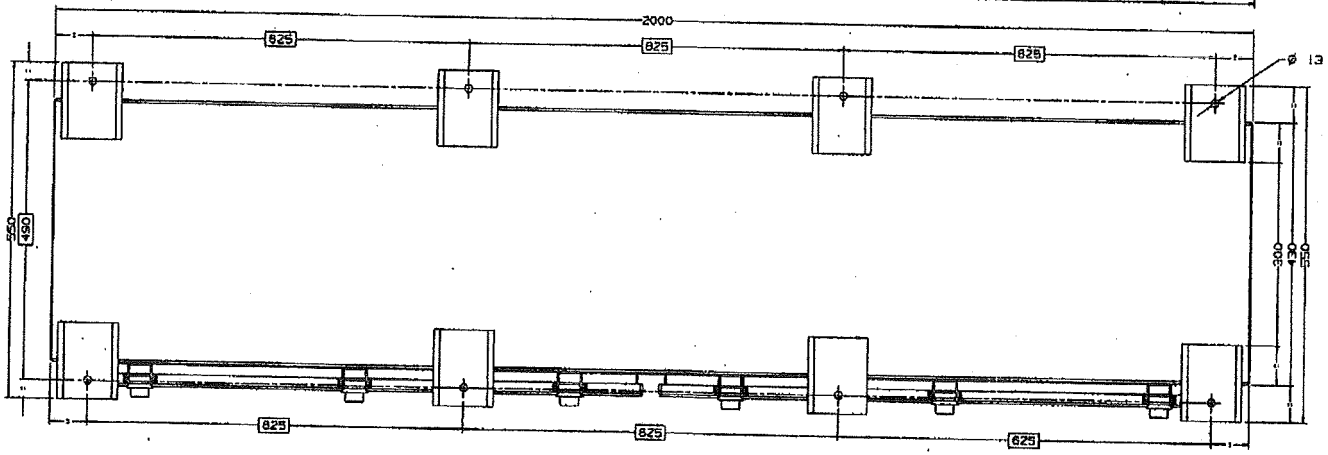

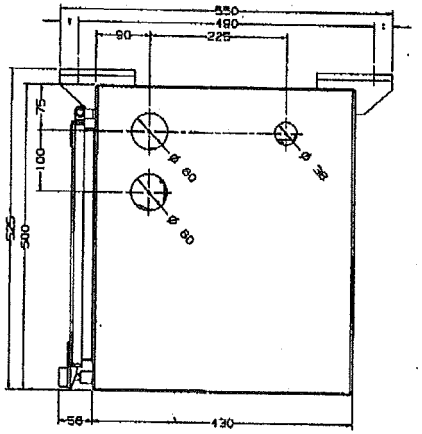

RIGHT SIDE VIEW

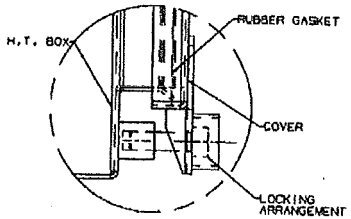

DETAIL AT - A

NOTE:- 1. ALL DIMENSIONS IN MM.
2. THE CUBICLE SHALL BE IP-65 PROTECTED.

ANY MANUAL ALTERATION SHALL AUTOMATICALLY RENDER THIS DRAWING INVALID.

FOR UNTOLERANCED DIMENSIONS REFER MDG0008

DETAIL DRGS STARTING WITH "LI" ARE INTERNAL REFERENCE LISTS ONLY AND ARE NOT FOR ISSUE.

DATE OF FIRST ISSUE 23/02/2012

DESCRIPTION & DIMENSIONS	UNDER-SLUNG H.V.-750V PANEL FOR NON-AC EOG LHB TYPE COACHES
GROUP	ELECTRICAL
FILE	D:\home\kojs\edtm355\ls71103aa.prt
DETAIL DRG	LS71103 ALT NIL
RAIL COACH FACTORY, KAPURTHALA	रेल कोच फैक्टरी कपूरथला
IRS	PL NO. NIL
	DRG.NO. LS71103
SCALE 1:5/10	SHEET 1/3

THIS DRAWING IS THE INTELLECTUAL PROPERTY OF RAIL COACH FACTORY, KAPURTHALA. THIS DRAWING SHALL NOT BE REPRODUCED, LENT OR DISCLOSED TO THIRD PARTIES OR COMPONENTS, SOLD OR TRANSFERRED WITHOUT PERMISSION FROM CHIEF DESIGN ENGINEER, RAIL COACH FACTORY, KAPURTHALA.

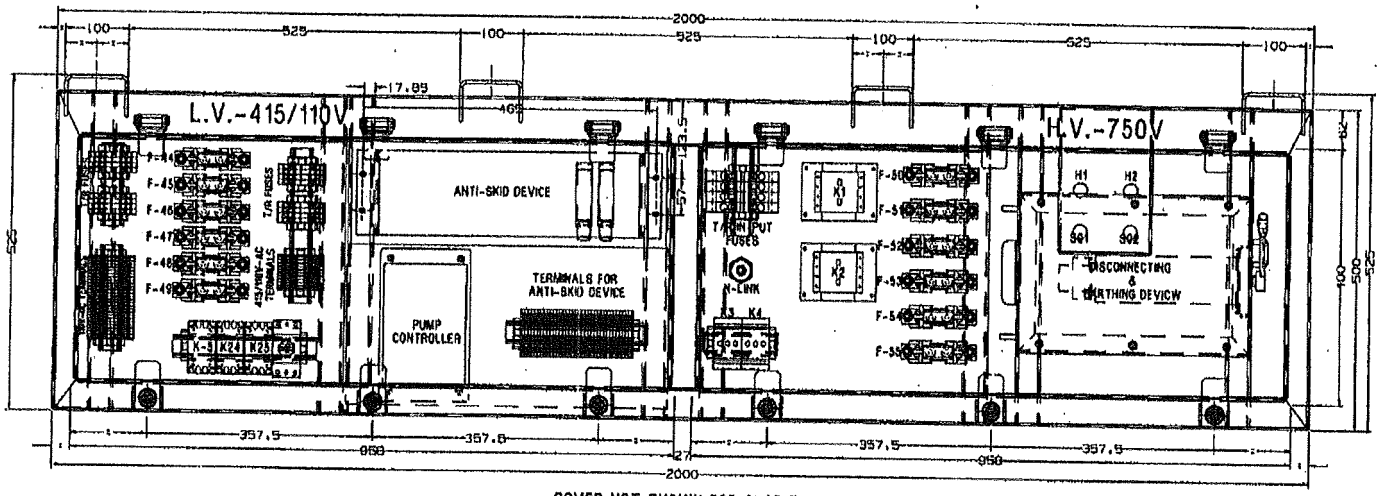

COVER NOT SHOWN FOR CLARITY

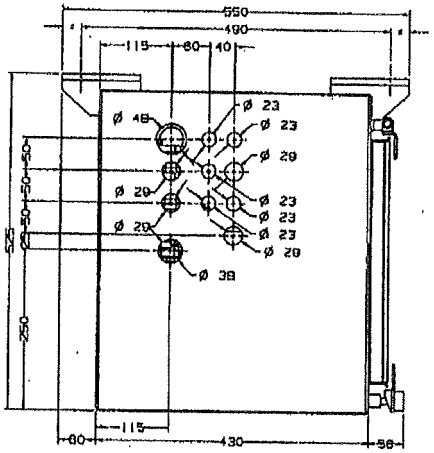

LEFT SIDE VIEW

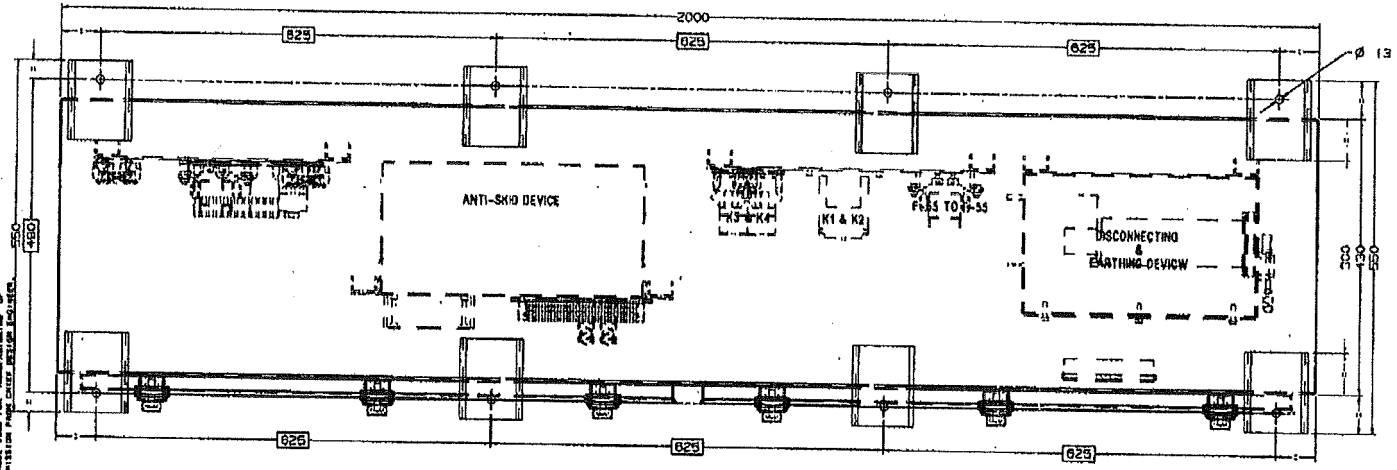

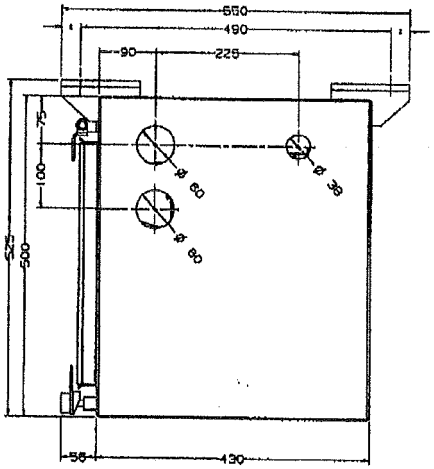

RIGHT SIDE VIEW

THIS DRAWING IS THE INTELLECTUAL PROPERTY OF RAIL COACH FACTORY, KAPURTHALA. THIS DRAWING WAS OWNED WITH RCF, KAPURTHALA, AND WAS USED FOR MANUFACTURING OF COMPONENTS. SOLD OR TRANSFERRED WITHOUT PERMISSION FROM CHIEF DESIGN ENGINEER, RAIL COACH FACTORY, KAPURTHALA.

NOTE:- 1. ALL DIMENSIONS IN MM.
2. THE CUBICLE SHALL BE IP-65 PROTECTED.

ANY MANUAL ALTERATION SHALL AUTOMATICALLY RENDER THIS DRAWING INVALID.

FOR UNTOLERANCED DIMENSIONS REFER MDG0008

DETAIL DRGS STARTING WITH "L1" ARE INTERNAL REFERENCE LISTS ONLY AND ARE NOT FOR ISSUE.

DATE OF FIRST ISSUE 23/02/2012

WELD LENGTH	ITEM	DESCRIPTION & DIMENSIONS	DETAIL DRG
NIL	GROUP	ELECTRICAL	LS71103 ALT NIL
WEIGHT	FILE	D:\home\ka_js\edts355\ls71103aa.prt	
NIL kg		UNDER-SLUNG H.V.-750V PANEL	
NIL		FOR NON-AC EOG LHB TYPE COACHES	
NIL		RAIL COACH FACTORY, KAPURTHALA	
NIL		रेलकोच फैक्टरी कपूरथला	IRS
NIL			

PL NO. NIL

DRG.NO. LS71103

ALT. 0

ALT.NO	ALT.DATE	ZONE	ALTERATIONS	AUTHORITY
Q	23/02/2011	ALL ALL	1.VOLT METERS FOR FEEDER-162 DELETED. 2.NOTE-2 ADDED.	DIC.NO. E000

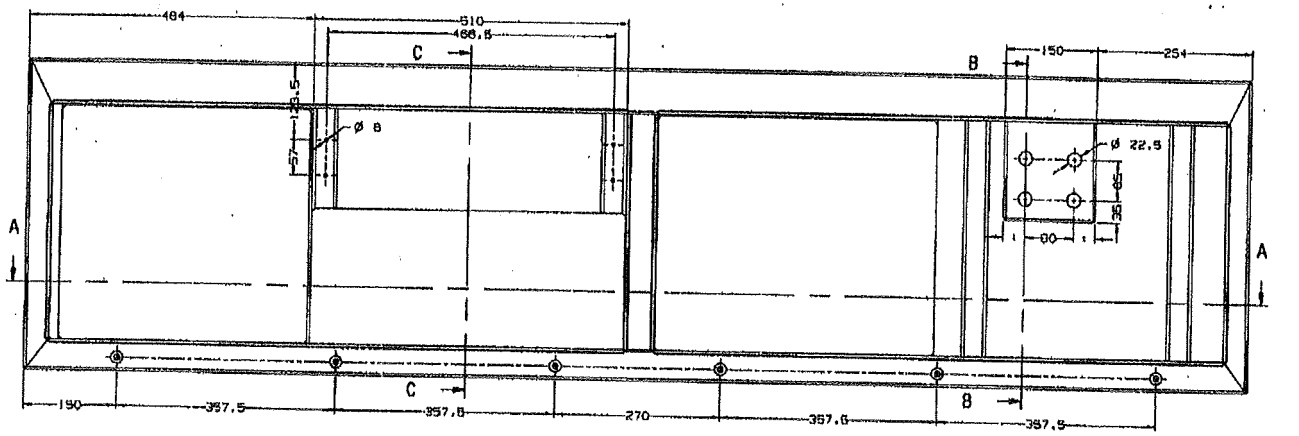

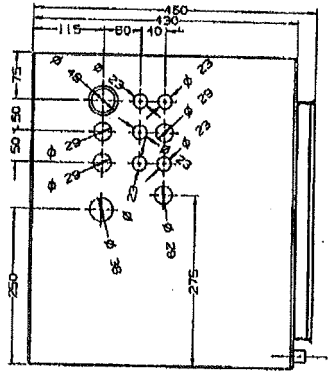

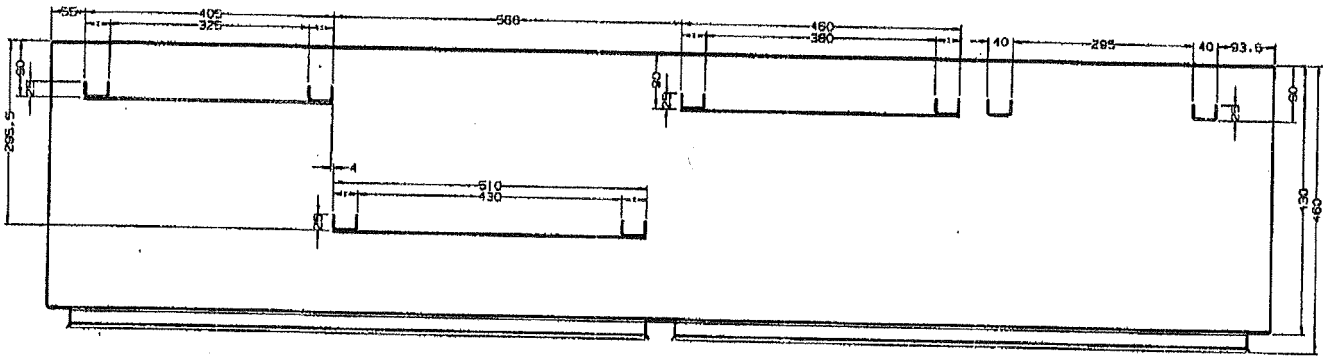

SECTION A-A

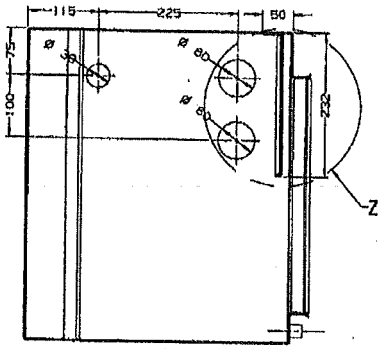

SECTION B-B

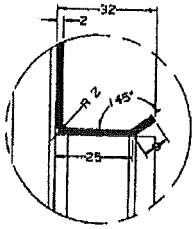

DETAIL AT - X

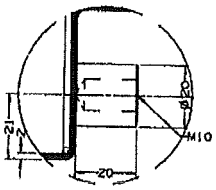

DETAIL AT - Y

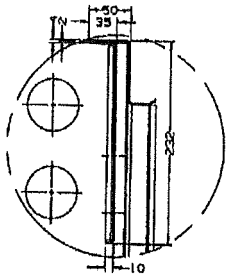

DETAIL AT - Z

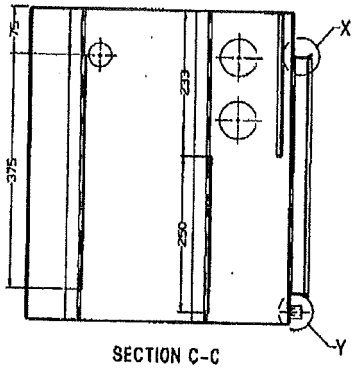

SECTION C-C

TENTATIVE

NOTE:- 1. ALL DIMENSION IN MM.
2. THE CUBICLE SHALL BE IP-65 PROTECTED.

ANY MANUAL ALTERATION SHALL AUTOMATICALLY RENDER THIS DRAWING INVALID.

FOR UNTOLERANCED DIMENSIONS REFER MDG0008

DETAIL DRGS STARTING WITH "LI" ARE INTERNAL REFERENCE LISTS ONLY AND ARE NOT FOR ISSUE.

DATE OF FIRST ISSUE 23/02/2012

WELD LENGTH	ITEM	DESCRIPTION & DIMENSIONS	MATERIAL / DETAIL DRG / MATL. & WGT. / REMARKS
NIL	GROUP	ELECTRICAL	SUPERSEDES: LS71103 ALT NIL
WEIGHT	FILE	D:\home\ko_m\edt=355\l=71103qq.prt	
NIL		DETAIL OF UNDER-SLUNG H.T. BOX	
S.AREA		FOR NON-AC EOG LHB TYPE COACHES	
NIL		RAIL COACH FACTORY, KAPURTHALA	
NIL		रेल कोच फैक्टरी कपूरथला	IRS
NIL			
HEIGHT			
NIL			

PL NO. NIL

DRG.NO. LS71103

ALT. Q SIZE A3 SHEET 3/3

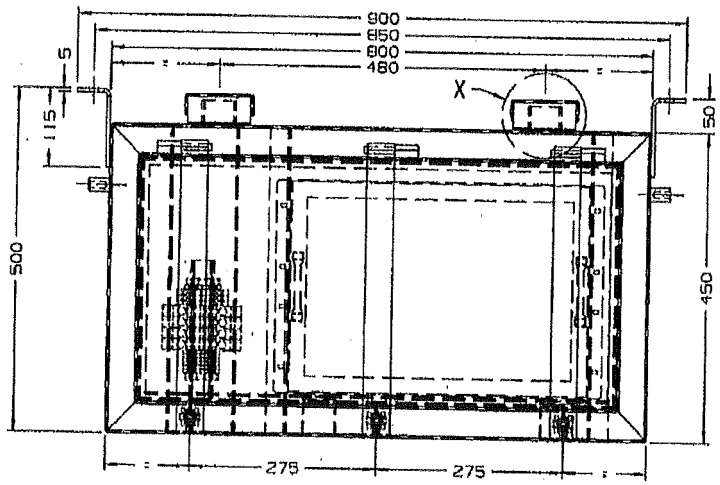

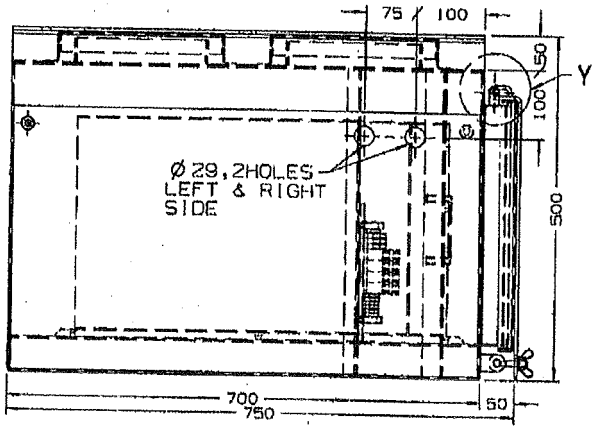

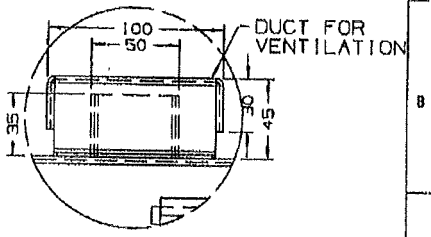

DETAIL AT- X

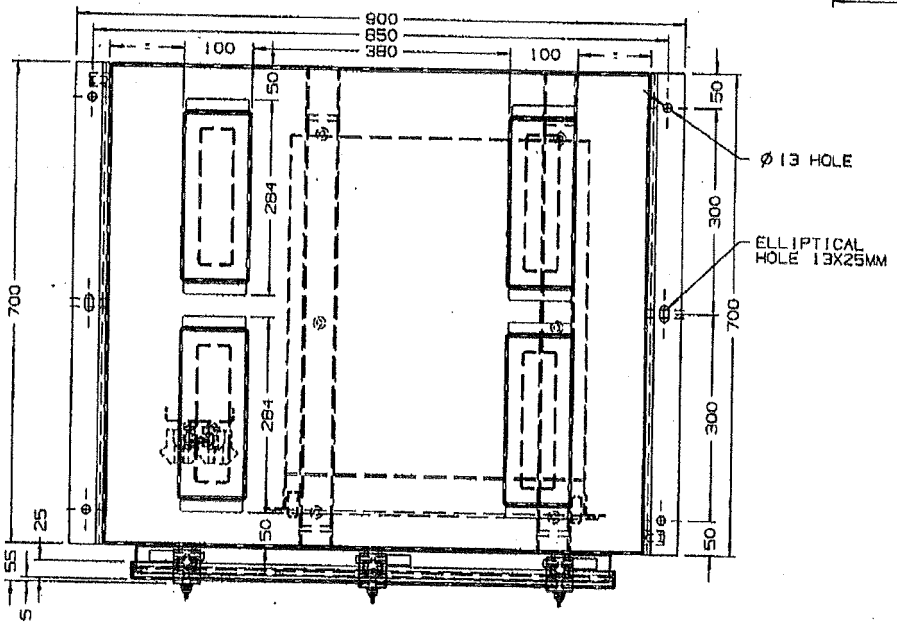

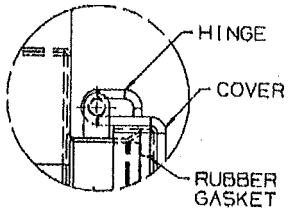

DETAIL AT - Y

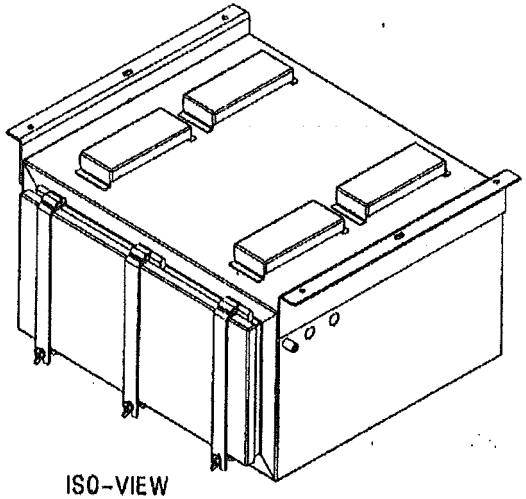

ISO-VIEW

TENTATIVE

NOTE:- 1. ALL DIMENSIONS IN MM.

DETAIL DRGS STARTING WITH "LI" ARE INTERNAL REFERENCE LISTS ONLY AND ARE NOT FOR ISSUE.

THIS IS A COMPUTER GENERATED DRAWING. ANY MANUAL ALTERATION SHALL AUTOMATICALLY RENDER IT INVALID.

FOR UNTOLERANGED DIMENSIONS REFER MDG0008 | DATE OF FIRST ISSUE | 15/02/2012

ALT.NO	ALT.DATE	ZONE	ALTERATIONS	AUTHORITY

WELD LENGTH	ITEM	DESCRIPTION & DIMENSIONS	QPASSLY	DETAIL DRG	MATL. & SPEC.	REMARKS
NIL M	GROUP	ELECTRICAL	SUPERSEDES:	LS71104 ALT NIL		
WEIGHT	FILE					
NIL KG		UNDER-SLUNG BOX WITH RBC FOR NON-AC EOG LHB TYPE COACHES			SCALE	SSE/BD
S.AREA						CHD
NIL M²						DRN
LENGTH / DIA						
NIL M		RAIL COACH FACTORY, KAPURTHALA			REF.DRG.NO	NIL
WIDTH / THICK						
NIL M		रेल कोच फैक्टरी कपूरथला	IRS		PL NO.	NIL
HEIGHT						
NIL M		SEE/D&D	DY.CEE/D&D		DRG.NO.	LS71104
					ALT. 0	SIZE A3 SHEET 1/3

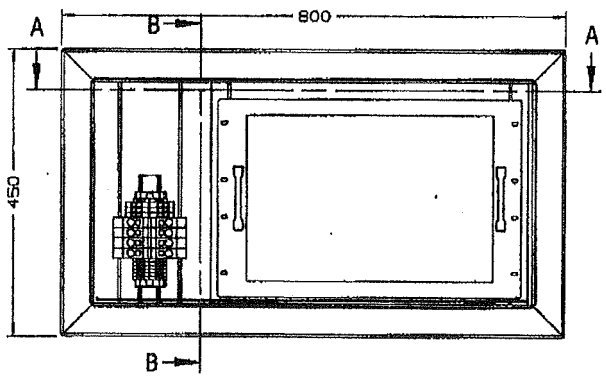

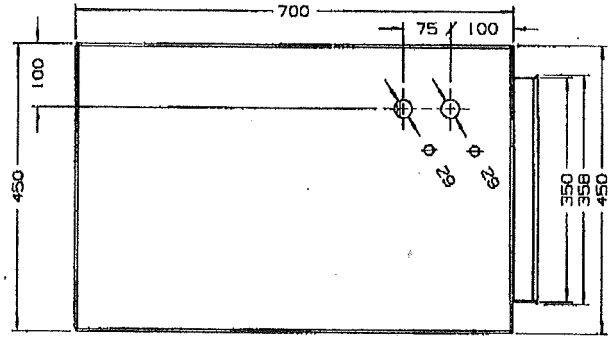

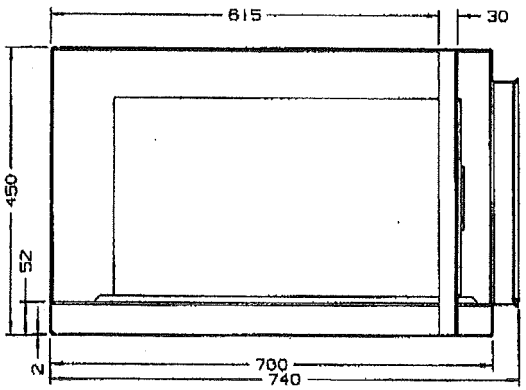

SECTION B-B

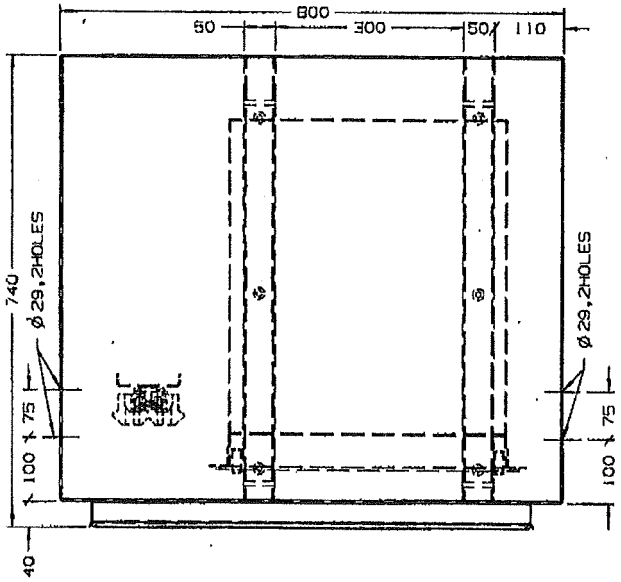

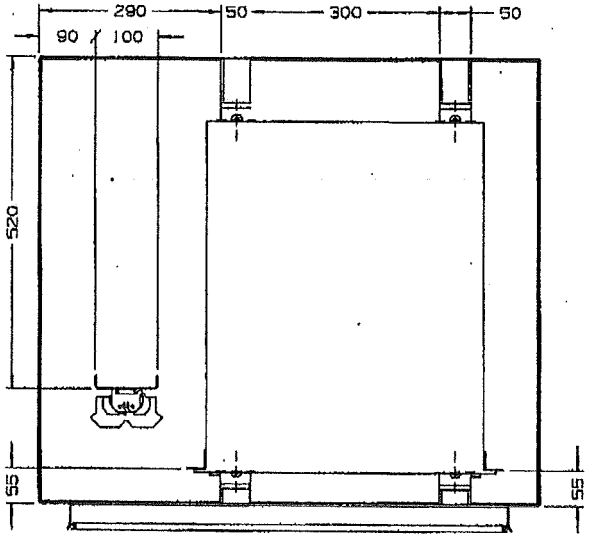

SECTION A-A

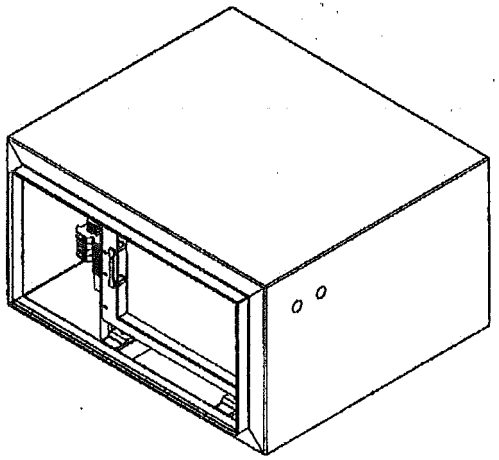

ALT.NO	ALT.DATE	ZONE	ALTERATIONS	AUTHORITY

WELD LENGTH	ITEM	DESCRIPTION & DIMENSIONS	SUBASSLY	DETAIL DRG	MATL. & SPEC.	REMARKS
NIL M	GROUP	ELECTRICAL	SUPERSEDES:	LS71104 ALT NIL		
WEIGHT	FILE	D:\home\ka_js\edts355\ls71104a.prt				
NIL KG		RBC-BOX DETAILS			SCALE	SSE/DO
S.AREA		UNDER-SLUNG BOX WITH RBC				CHD
NIL M2		FOR NON-AC EOG LHB TYPE COACHES				DRN
LENGTH / DIA						
NIL M		RAIL COACH FACTORY, KAPURTHALA			REF.DWG.NO.	NIL
WIDTH / THICK		रेल कोच फैक्टरी कपूरथला	IRS		PL NO.	NIL
NIL M					DRG.NO.	LS71104
HEIGHT		SEE/D&O		DY.CEE/D&O	ALT. a	SIZE A3 SHEET 2/3
NIL M						

TENTATIVE

NOTE:- 1. ALL DIMENSIONS IN MM.

DETAIL DRGS STARTING WITH "LI" ARE INTERNAL REFERENCE LISTS ONLY AND ARE NOT FOR ISSUE.

THIS IS A COMPUTER GENERATED DRAWING. ANY MANUAL ALTERATION SHALL AUTOMATICALLY RENDER IT INVALID.

FOR UNTOLERANCED DIMENSIONS REFER MDG0008 | DATE OF FIRST ISSUE | 15/02/2012

ALT.NO	ALT.DATE	ZONE	ALTERATIONS	AUTHORITY
a	24/02/2012	ALL	1.BATEERY CHARGER TERMINALS ARE MOUNTED VERTICALLY FOR EASY ACCESS.	Dic.No. ED000

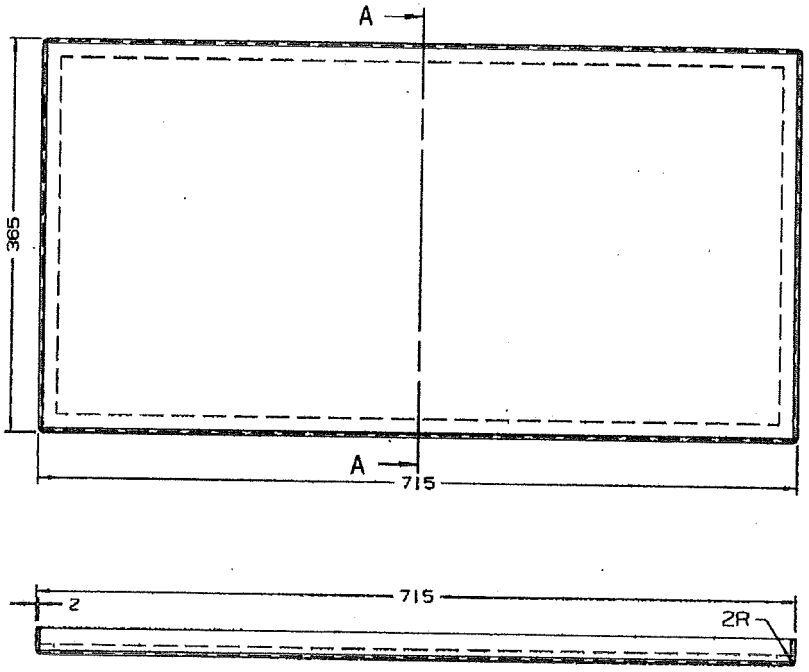

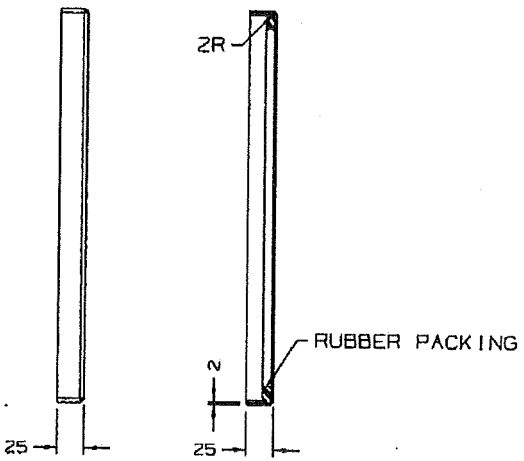

SECTION A-A

THIS DRAWING IS THE INTELLECTUAL PROPERTY OF RAIL COACH FACTORY, KAPURTHALA. THIS DRAWING SHALL NOT BE REPRODUCED, ALTERED, USED FOR MANUFACTURING OF COMPONENTS, SOLD OR TRANSFERRED WITHOUT PERMISSION FROM CHIEF DESIGN ENGINEER, RAIL COACH FACTORY, KAPURTHALA.

NOTE :- 1. ALL DIMENSIONS IN MM.

DETAIL DRGS STARTING WITH "LI" ARE INTERNAL REFERENCE LISTS ONLY AND ARE NOT FOR ISSUE.

THIS IS A COMPUTER GENERATED DRAWING. ANY MANUAL ALTERATION SHALL AUTOMATICALLY RENDER IT INVALID.

FOR UNTOLERANCED DIMENSIONS REFER MDG0008 | DATE OF FIRST ISSUE | 15/02/2012

WELD LENGTH	ITEM	DESCRIPTION & DIMENSIONS	SPARSLT	DETAIL DRG	MATL. & SPEC.	REMARKS
NIL M	GROUP	ELECTRICAL	SUPERSEDES:	LS71104 ALT NIL		
WEIGHT	FILE	D:\home\ka_js\edts355\ls71104a.prt				
NIL KG		COVER FOR RBC - BOX FOR NON-AC EOG LHB TYPE COACHES				
S.AREA						
NIL M²						
LENGTH / DIA						
NIL M		RAIL COACH FACTORY, KAPURTHALA				
WIDTH / THICK						
NIL M		रेलकोच फैक्टरी कपूरथला	IRS			
HEIGHT						
NIL M		SEE/D&D		DY.CEE/D&D		

SCALE	SSE/ED
	CHD
	DRN
REF.DRG.NO.	NIL
PL NO.	NIL
DRG.NO.	LS71104
ALT. a	SIZE A3 SHEET 3/3

Amendment No. 2

This Amendment is issued to Spec NO.- EDTS 355 Rev. 1 , Am-1 for specification for set of panels for LHB EOG Non AC Coaches to chang - the control supply of feeder contactors S1K01 and S1K02 from 110V DC to 110V AC as per Drg. No. LS70117 / Alt. 'C'

The following modifications shall be carried out: -

1. **HV Panel**

   2 nos. 100 VA, 750/110 V transformers (H class insulation, suitable for rolling stock application) with 1 A fuse in primary side as well as in secondary side shall be provided in the under slung HV Panel on HV-750 V side of the cubicle (Drg. No.LS71103 Alt. 'A'). The Switch Gear provided i.e. HV fuses, feeder contactors and MMR's may be suitably relocated to accommodate these step down transformers.

2. **LV on board Rotary Switch Panel**

   As per Drg. No. LS70117 Alt.'C' one additional ON-OFF Rotary Switch shall be provided in the on board LV Panel and shall be housed in fuse and terminal panel to Drg. No. CC72082 Alt.'a'.

3. **Additional Material Required:**

S.N	Item Description	Specification	Manufacturer/Supplier	Qty
1.0	Step down 100 VA, 750/110V transformers	H class insulation suitable for rolling stock application	M/s. Bhasin Packard, Chandigarh M/s. Vimal Transformers, Moradabad M/s. Pantronics, Mumbai M/s. NACEI,Ambala M/s Ramyaa Electro Gear Private Limited, Chennai	2
2.0	HV fuses with fuse base. 1 A, 1.2 KV AC	70034049/1 7103401 of M/s. Siba or equivalent	M/s. Siba/ Wohner/ Ferraz / GE/ Schneider / Bussmann / L&T	4
3.0	LV fuses with fuse base. 1A, 250 V AC			4
4.0	Cam Operated ON OFF Rotary Switch Toggle switch 0 1 power supply ON OFF, 2 pole	CAT No. 61198 SG of M/s. Salzer or equivalent	SALZER, Siemens, TEKNIC	1

Note: Firms shall get layout/Drawing approved for location of the additional items before supply of the set of panels.

EDTS-355	01	2	10.06.2014				1 of 1
Spec. No.	Rev.	Am.	Date	SSE/CAD	AEE/D	DY.CEE/D&D	Page

APPROVED
Ref No. EL/71108/SBC Date 15.10.2014

For Director General 15/10/14
RDSO Lucknow-226011

R.C.F.

(2)

Tele / Fax : 91-0522- 2465738/2465717
Telegram : 'RAILMANAK', Lucknow
Email dsesystem@gmail.com

भारत सरकार रेल मंत्रालय
अनुसंधान अभिकल्प और मानक संगठन
लखनऊ - २२६०११
Government of India
Ministry of Railways
Research, Designs & Standards Organization,
LUCKNOW – 226011

No. EL/7.1.108/SBC

15th October 2014

1. मेसर्स एस0एस0के0 इंजीनियरिंग क0 लिमिटेड, फैक्टरी एरिया, पी.ओ. बॉक्स–8,कपूरथला–144 601
2. मेसर्स इन्स्ट्रूमेन्टेशन लि0, आलावाड रोड, कोटा–324 005 (राजेस्थान)
3. मेसर्स इन्टरनेशनल स्वीचगीयर्स प्रा0 लि0 975–ए, इं0 एरिया, फेस.II, चंडीगढ –160 002
4. मेसर्स एबरोल इंजीनियरिंग कं0, प्रा0 लि0 पी.ओ. बॉक्स–2, एबरोल हाउस, इं0 एरिया, कपूरथला–144 601 , पंजाब
5. मेसर्स अमित इंजीनीयर्स, विलेज जुठी कालन, जिला सोलन,तह नालागढ, बद्दी, हिमाचल प्रदेश–173205
6. मेसर्स ट्रिनीट्रान कन्ट्रोल सिस्टमस प्रा लि0 02 03 04, ट्रनाग सिटी, इकोटेक III ,ग्रेटर नोएडा, गौतम बुध नगर, यू.पी.–201 308
7. मेसर्स एन.ई.सी. स्विचगियर्स एंड कंट्रोल्स, ई 254, इन्डस्ट्रियल एरिया, फेस 7, बी, मोहाली – 160 071

Sub: Amendment No.2 to RDSO specification No. EDTS-355, Rev.1 of set of panels of non AC LHB coaches.
Ref : RCF's letter no. ED-2009/RDSO dtd. 29.09.2014.

Amendment No.2 of specification No. EDTS-355, Rev.1 of set of panels of non AC LHB coaches has been issued by RDSO. The salient features of amendment no.2 are as follows:-

1. Introduction of 2 nos. 100VA, 750/110 V step down transformers with fuses of 1 Amp. in primary & secondary.
2. Cam operated ON/OFF rotary switch toggle switch.

Copy of the amendment along with revised drawings are enclosed for reference. All vendors are advised to implement the same & submit the compliance to the RDSO at the earliest.

This is for your information & record.

(R.A.Jamali)
DSE(TL-AC System Design)
For Director General/PS&EMU

DA : As above

Copy to:-

1. Chief Electrical Engineer, Integral Coach Factory, Perumbur, Chennai- 600 038 — For kind information please.
2. Chief Electrical Engineer, Rail Coach Factory, Hussainpur, Kapurthala- 144 602 — For kind information please.
3. Chief Electrical Engineer, Rail Coach Factory, Lalganj, Raibarelly — For kind information please.
4. सचिव विद्युत रेलवे बोर्ड, रेल भवन, रेल मंत्रालय, नयी दिल्ली - 110 001
   Kind attn.: Sri Vinayak Garg (DEE/G) — For kind information please.
   Secretary (Electrical)/G, Railway Board, Rail Bhawan, New Delhi-110001

(R.A.Jamali)
DSE(TL-AC System Design)
For Director General/PS&EMU

B. RDSO vide letter no. EL/7.10.1/LHB/1 dated 12.10.2017 has issued specification no. RDSO/PE/SPEC/AC/0183-2015 (Rev-'0') for 4.5 KW underslung type constant voltage regulated battery charger for LHB coaches. The design of the battery charger is without the requirement of additional battery charger box, therefore the existing battery charger box to drawing no. LS71104 shall not be required. In view of above, the following amendment is issued:

Clause 4.1 of the specification amended as follows:

4.1 The set of panels comprises f the various cubicles consisting of power and control switchgears consisting of following:

i	H V Cubicle	LS71103	2000(L)x550(D)x525(H)
Ii	Low Voltage Panel including cable cover for top and bottom as indicated in the drawing	CC72081	500(W)x130(D)x1000(H) with mounting angle of 125 mm on top and bottom.

No positive tolerances are allowed. However, negative tolerances shall be governed by MDG0008

Amendment No-3 to specification for set of panels for LHB EOG Non-AC Coaches no. - EDTS-355, Rev-1, Am-2

A. This Amendment is issued to specification for set of panels for LHB EOG Non-AC Coaches to specification no. EDTS-355, Rev-1, Am-2, to incorporate the modifications required as per RDSO letter No. EL/7.1.108/SBC/Policy, dt.21/08/2017. for provision of RC filters in secondary windings of 9/15 KVA transformers to comply with HOG system requirements according to amendment -1 to Modification sheet RDSO/PE/MS/AC/0051-2011 (Rev-2) issued by RDSO in march2017.

As per the modification issued by RDSO , 2 nos. of RC filters shall be provided in High Voltage (HV) Panel i.e one RC filter will be provided between phase and neutral and other RC filter will be provided between phase and earth of each of the secondary windings i.e 415V and 190V windings of 9/15 KVA transformers, to improve voltage waveform.

RDSO drawing no. RDSO/PE/SK/AC/0197-2016(Rev-0) for General Schematic diagram of Power and Control circuit of Non AC LHB EOG coaches with two numbers of RC Filters to make them HOG compliant enclosed as Annexure-E in the Am-1 of modification sheet Rev-2 shall be followed.

The following material shall be required for implementation of this amendment:

1. Material Required:-

S. No.	Item Description	Specification	Qty.	Remarks
1	RC filter	Each RC filter consists of 1ohm , 6/10W resistance connected in series with parallel connected 1.5 MFD 850/1000V range capacitors (EPCOS /VISHAY or equivalent make capacitor with prior approval of RDSO) in each arm of star connected to be provided between phase and neutral and phase and earth of each secondary winding of 9/15 KVA transformer. The RC filter shall be of M/s Siemens / M/s Medha or any equivalent make. The mounting arrangement of RC filter shall be as per sheet 2 of 2 of RDSO drg. No. RDSO/PE/SK/AC/0188 2015 Rev.0.and RDSO drg. No. RDSO/PE/SK/AC/0197-2016,Rev-0.	4 nos. (2 nos. 415V side and 2nos.190V side windings)	Item-12 of Cl. 5.1 of modification sheet no. RDSO/PE/MS/AC/0051-2011(Rev-2)

Note:-Firms shall get drawings approved for location of the additional item before supply of the set of panels.

Amendment No. - 4 to Specification No. EDTS-355, Rev. 01, Amendment - 1, 2 & 3

This amendment is issued to specification no. EDTS-355, Rev.01, Amendement-1, 2 & 3 for Set of Panels for LHB EOG Non-AC coaches to shift RCBO from underslung HV Panel to Onboard LV Panel for ease of trouble shooting by users railway during the coach run accordingly "Fuse and Terminal Panel" to drawing no. CC72082, alt.'a' revised to CC72082, alt.'b'.

EDTS-355, Rev.01, Am-1,2 & 3	4	30.07.2020				Page 1 of1 pages
Spec. No.	Amendment No.	Date	SSE/CAD	SEE/D	DY.CEE/D&D	Page No.

ALT.NO	ALT.DATE	ZONE	ALTERATIONS	AUTHORITY
a	10/02/2012	ALL - -	1.DRAWING MODIFIED. 2.RATING OF HRC FUSE TO ITEM NO.10 CHANGED FOR 2A TO 6A. 3.DETAIL DRG.FOR ITEM NO.23 CHANGED FROM BOM123 TO BOM138.	DIC.NO. ED120001
b	18/02/2020	ALL	1. QTY. FOR ITEM-4 CHANGED FROM 1 TO 2. 2. LENGTH OF ITEM-5 CHANGED FROM 150MM TO 200MM. 3. QTY. FOR ITEM-15 CHANGED FROM 10 TO 14. 4. DESC. OF ITEM-16 CHANGED FROM " LEGEND PLATE 1X20X64 (T1,T2,T3,T4,T5 & T8) TO "LEGEND PLATE 1X20X132 (T1,T2,T3,T4,T5,T6,T7,T8,T9,T10,T11,T12,T13,T14,T15,T16,T17,T18). 5. DESC. OF ITEM-17 CHANGED FROM " LEGEND PLATE 1X20X150 (FOUR POLE RCBO) TO "LEGEND PLATE 1X20X200 ((FOUR POLE RCBO, CDTS+VE, CDTS.-VE). 6. DESC. OF ITEM-23 CHANGED FROM " ROTARY SWITCH 16A,250V AC/DC, 2 WAY WITH-OFF (WITHOUT KNOB)" TO " ROTARY SWITCH 16A, 3-POLE, 2 WAY WITH-OFF FOR FEEDER SELECTION". 7. DETAIL DRAWING FOR ITEM-23 CHANGED FROM "CAT. NO. BOM138" TO "CAT. NO. S16-61153-B03-TDYR". 8. LENGTH OF ITEM-24 CHANGED FROM 80MM TO 140MM. 9. ITEM-29 TO ITEM-38 ADDED. 10. RCBO (ITEM-5), RSW FOR FEEDER SELECTION (ITEM-23) & TEST PUSH BUTTON (ITEM-21) FOR AEL RELOCATED AND DRAWING MODIFIED ACCORDINGLY.	CHANGE REQUEST NO. ED/CR/ 2020-0003

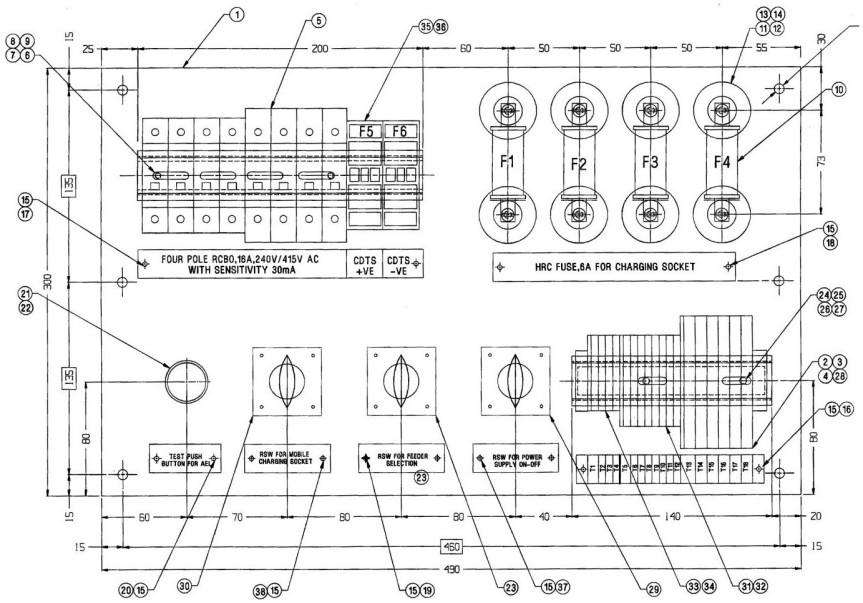

23	ROTARY SWITCH 16A, 3 POLE 2-WAY WITH-OFF FOR FEEDER SELECTION	1	S16-61153-B03-TDYR	NIL	M/S SALZER MAKE OR EQUIVALENT						
22	CONTACT MECHANISM WITH IND+INC	1	CAT.NO. 3SB1400-0A	NIL	OF SIEMENS OR EQUIVALENT GE/GSCMAKE						
21	PUSH BUTTON,NORMAL ACTUATOR WITH PLASTIC FRONT RING & HOLDER COLOUR 'GREEN'	1	CAT.NO. 3SB1200-0AE01	NIL	OF SIEMENS OR EQUIVALENT GE/GSCMAKE						
20	LEGAND PLATE 1X20X50 (TEST PUSH BUTTON FOR AEL)	1	NIL	IS: 737-74, 19000-H2	BRIGHT * ANNODISED						
19	LEGAND PLATE 1X20X60 (RSW FEEDER SELECTION)	1	NIL	IS: 737-74, 19000-H2	BRIGHT * ANNODISED						
18	LEGAND PLATE 1X20X170 (HRC FUSE)	1	NIL	IS: 737-74, 19000-H2	BRIGHT * ANNODISED						
17	LEGAND PLATE 1X20X200 (FOUR POLE RCBO, CDTS+VE, CDTS-VE)	1	NIL	IS: 737-74, 19000-H2	BRIGHT * ANNODISED						
16	LEGAND PLATE 1X20X132 (T1,T2,T3,T4,T5,T6,T7,T8,T9,T10 T11,T12,T13,T14,T15,T16,T17,T18)	1	NIL	IS: 737-74, 19000-H2	BRIGHT * ANNODISED						
38	LEGAND PLATE 1X20X60 (RSW FOR MOBILE CHARGING SOCKET)	1	NIL	IS: 737-74, 19000-H2	BRIGHT * ANNODISED	15	SNAP HEAD RIVET, Ø 2X6	14	IS: 2907-64, T-2,F16-1	IS: 740-77, 64430	NIL
37	LEGAND PLATE 1X20X60 (RSW FOR POWER SUPPLY ON-OFF)	1	NIL	IS: 737-74, 19000-H2	BRIGHT * ANNODISED	14	PLAIN WASHER Ø 5	8	IS 8063-94 T-1,TYPE-B	NIL	NIL
36	HRC FUSE HOLDER	2	CAT.NO. 3NW 32NSF	NIL	M/S SIEMENS MAKE OR EQUIVALENT APPROVED MAKE	13	SPRING WASHER M5	8	IS 8063-94 T-1,TYPE-B	NIL	NIL
35	HRC FUSE 4A, BS-TYPE	2	CAT.NO. 3NW NS4	NIL	M/S SIEMENS MAKE OR EQUIVALENT APPROVED MAKE	12	INSULATING SPACER	8	NOVAFLEX/ BINAME	NIL	OR ANY OTHER RDSO APPROVED MAKE
34	END AND INTERMEDIATE PLATE	1	CAT.NO. 280-308	NIL	OF M/S WAGO OR EQUIVALENT APPROVED MAKE	11	CHEESE HEAD SCREW M5X20,GALVD.	8	IS: 1366-82, 4.8,TAB-1	NIL	NIL
33	2-CONDUCTOR THROUGH TERMINAL BLOCK (T1,T2,T3,T4)	4	CAT.NO. 280-901	NIL	OF M/S WAGO OR EQUIVALENT APPROVED MAKE	10	HRC FUSE 6A (BOLTED CONNECTIONS)	4	NIL	IS: 13703-93(PT-II) 3NW 11A OF SIEMENS/GE/ AEG MAKE	NIL
32	END AND INTERMEDIATE PLATE	1	CAT.NO. 280-324	NIL	OF M/S WAGO OR EQUIVALENT APPROVED MAKE	9	PLAIN WASHER 5.5,GALVD.	2	IS: 2016-67, T3,TY-B	NIL	NIL
31	3-CONDUCTOR THROUGH TERMINAL BLOCK (T5,T6,T7,T8,T9,T10,T11,T12	8	CAT.NO. 280-681	NIL	OF M/S WAGO OR EQUIVALENT APPROVED MAKE	8	SPRING WASHER M5,GALVD.	2	IS: 3063-94, TY-B	NIL	NIL
30	ROTARY SWITCH 10A, 4 POLE, ON-OFF FOR MOBILE CHARGING SOCKET	1	S10-61004-B13-TDYR	NIL	M/S SALZER MAKE OR EQUIVALENT	7	CHEESE HEAD SCREW M5X16,GALVD.	2	IS: 1366-82, 4.8,TAB-1	NIL	NIL
29	ROTARY SWITCH 6A, 2 POLE, ON-OFF FOR POWER SUPPLY	1	S6-61198-B13-TDYR	NIL	M/S SALZER MAKE OR EQUIVALENT	6	DIN 35 RAIL FOR TERMINAL BLOCKS, L=200MM	1	CAT.NO. 210-162	NIL	OF M/S WAGO OR EQUIVALENT APPROVED MAKE
28	3-CONDUCTOR GROUND (EARTH) TERMINAL BLOCK (T17 & T18)	2	CAT.NO. 282-687	NIL	OF M/S WAGO OR EQUIVALENT APPROVED MAKE	5	FOUR POLE RCBO,16A,240V/415V AC WITH SENSITIVITY 30mA	1	CAT.NO. 6033-95	NIL	OF M/S LEGRAND OR EQUIVALENT APPROVED MAKE
27	PLAIN WASHER 5.5,GALVD.	2	IS: 2016-67, T3,TY-B	NIL	NIL	4	SCREWLESS END STOP FOR DIN 35 RAIL	2	CAT.NO. 249-117	NIL	OF M/S WAGO OR EQUIVALENT APPROVED MAKE
26	SPRING WASHER M5,GALVD.	2	IS: 3063-94, TY-B	NIL	NIL	3	END AND INTERMEDIATE PLATE	1	CAT.NO. 282-308	NIL	OF M/S WAGO OR EQUIVALENT APPROVED MAKE
25	CHEESE HEAD SCREW M5X16,GALVD.	2	IS: 1366-82, 4.8,TAB-1	NIL	NIL	2	3-CONDUCTOR THROUGH TERMINAL BLOCK (T13,T14,T15,T16)	4	CAT.NO. 282-681	NIL	OF M/S WAGO OR EQUIVALENT APPROVED MAKE
24	DIN 35 RAIL FOR TERMINAL BLOCKS, L=140MM	1	CAT.NO. 210-162	NIL	OF M/S WAGO OR EQUIVALENT APPROVED MAKE	1	BASE PLATE FOR FUSE AND TERMINAL PANEL 3.25X490X300	1	IS: 513-94	NIL	NIL
						ITEM	DESCRIPTION & DIMENSIONS	QPASSLY	DETAIL DRG	MATL. & SPEC.	REMARKS

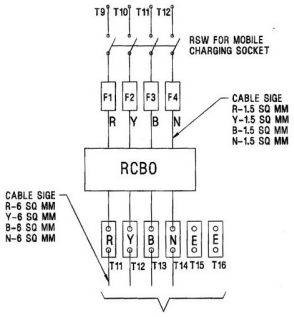

CONNECTION DIAGRAM

TERMINAL CODIFICATION CHART			
T1	RSW POWER SUPPLY	T13	190V 3 Ø AC UNDERFRAME
T2	RSW POWER SUPPLY	T14	190V 3 Ø AC UNDERFRAME
T3	RSW FEEDER SELECTION	T15	190V 3 Ø AC UNDERFRAME
T4	RSW FEEDER SELECTION	T16	190V 3 Ø AC UNDERFRAME
T5	AEL (+VE)	T17	GROUND TERMINAL
T6	AEL (-VE)	T18	GROUND TERMINAL
T7	CDTS (+VE)		
T8	CDTS (-VE)		
T9	RSW MOBILE CHARGING		
T10	RSW MOBILE CHARGING		
T11	RSW MOBILE CHARGING		
T12	RSW MOBILE CHARGING		

THIS DRAWING IS THE INTELLECTUAL PROPERTY OF RAIL COACH FACTORY, KAPURTHALA. THIS DRAWING SHOULD NOT BE REPRODUCED, ALTERED, USED FOR MANUFACTURING OF COMPONENTS OR COPIED TO OTHERS WITHOUT PERMISSION FROM CHIEF DESIGN ENGINEER, RAIL COACH FACTORY, KAPURTHALA.

NOTE:-
1. ALL DIMESIONS IN MM.
2. LETTERS OF 3MM HEIGHT SHALL BE DEEP ETCHED AND NEATLY APPLIED WITH BLACK ENAMEL PAINT.
*3. FRAMED DIMENSIONS ARE TO BE STRICTLY ADHERED TO.

WELD LENGTH	NIL M	GROUP	ELECTRICAL
WEIGHT	NIL KG	FILE	C:\Users\pond\Desktop\CC72082b.prt
S.AREA	NIL M^2	FUSE AND TERMINAL PANEL TO EDTS-355 REV-0,FOR LHB EOG NON-AC COACHES	
~~LENGTH/DIA~~	NIL M	RAIL COACH FACTORY, KAPURTHALA	
~~WIDTH/THICK~~	NIL M	रेल कोच फैक्टरी कपूरथला	IRS
HEIGHT	NIL M	SEE/D&D	DY.CEE/D&D

SUPERSEDES: CC72082 ALT a
SCALE | SSE/ED | CHD | DRN
REF.DRG.No. NIL
PL NO. NIL
DRG.NO. CC72082
ALT. b SIZE A1 SHEET 1/1

ANY MANUAL ALTERATION SHALL AUTOMATICALLY RENDER THIS DRAWING INVALID.

DETAIL DRGS STARTING WITH "LI" ARE INTERNAL REFERENCE LISTS ONLY AND ARE NOT FOR ISSUE.

FOR UNTOLERANCED DIMENSIONS REFER MDG0008

DATE OF FIRST ISSUE 10/02/2012

Amendment No.-5 to specification for "Set of panels for LHB EOG Non-AC Coaches without LV panel for LVPH coaches only": EDTS-355, Rev-1, Am-1, 2, 3 & 4

This Amendment is issued to specification for set of panels for LHB EOG Non-AC Coaches to specification no. EDTS-355, Rev-1, AM-1, 2, 3 & 4 to incorporate the requirements/modifications required for LVPH coaches only. Coach Light control is being done through Rotary switches provided at End-wall and as a result LV panel become redundant, hence, LV panel is not used in LVPH coaches.

Further, for weight reduction of the coach and keeping in view, the Electrical load of LVPH coaches, specification of Electrical equipments has been updated. 9kVA transformer has been replaced with 3kVA transformer and 4.5kW Regulated Battery Charger cum Emergency Battery Charger has been replaced with 2.5kW underslung Battery charger for LVPH coaches.

As a result, Fuse rating of output side of 3kVA transformer shall be modified in line with actual load. Further, LVPH coaches are not equipped with Monoblock pump assembly, therefore, Pump controller with other associated accessories i.e. MPCBs, Contactors and Electrical Wiring shall also be removed from existing HV panel.

The following changes shall be incorporated in Bill of Material of specification:

Existing:

Sr. No.	Item	Term Function Technical Data	Drawing No.	Manufacturer supplier	Place of Installation
1	12 F01	High Voltage fuse (with holder) net1 Gr.00C 1000V/25A AC:gB	2038603 2138601	Siba/EFEN/Ferraz/ETI /Siemens/Bussmann /Schneider/GE/L&T	S1F50
2	12 F02	High Voltage fuse (with holder) net1 Gr.00C 1000V/25A AC:gB	2038603 2138601	Siba/EFEN/Ferraz/ETI /Siemens/Bussmann / Schneider/GE/L&T	S1F51
3	12 F03	High Voltage fuse (with holder) net1 Gr.00C 1000V/25A AC:gB	2038603 2138601	Siba/EFEN/Ferraz/ETI /Siemens/Bussmann / Schneider/GE/L&T	S1F52
4	12 F04	High Voltage fuse (with holder) net2 Gr.00C 1000V/25A AC:gB	2038603 2138601	Siba/EFEN/Ferraz/ETI /Siemens/Bussmann / Schneider/GE/L&T	S1F53
5	12 F05	High Voltage fuse (with holder) net2 Gr.00C 1000V/25A AC:gB	2038603 2138601	Siba/EFEN/Ferraz/ETI /Siemens/Bussmann / Schneider/GE/L&T	S1F54
6	12 F06	High Voltage fuse (with holder) net2 Gr.00C 1000V/25A AC:gB	2038603 2138601	Siba/EFEN/Ferraz/ETI /Siemens/Bussmann / Schneider/GE/L&T	S1F55
7	12 F10	Low Voltage fuse (with holder) transformer (sec.) Gr.00 500V/25A GL/GG	03912, 03760 of M/s Wohner	Siba/EFEN/Ferraz/ETI /Siemens/Bussmann / Schneider/GE/L&T	S1F44

8	12 F11	Low Voltage fuse (with holder) transformer (sec.) Gr.00 500V/25A GL/GG	03912, 03760 of M/s Wohner	Siba/EFEN/Ferraz/ETI /Siemens/Bussmann / Schneider/GE/L&T	S1F45
9	12 F12	Low Voltage fuse (with holder) transformer (sec.) Gr.00 500V/25A GL/GG	03912, 03760 of M/s Wohner	Siba/EFEN/Ferraz/ETI /Siemens/Bussmann / Schneider/GE/L&T	S1F46
12	12 F15	Low Voltage fuse (with holder) transformer (sec.) Gr.00 500V/16A GL/GG	03909, 03760 of M/s Wohner	Siemens/WOHNER ITALWEBER/ Ferraz/Bussmann/ Schneider/GE/L&T	S1F47
13	12 F16	Low Voltage fuse (with holder) transformer (sec.) Gr.00 500V/16A GL/GG	03909, 03760 of M/s Wohner	Siemens/WOHNER ITALWEBER/ Ferraz/Bussmann/ Schneider/GE/L&T	S1F48
14	12 F17	Low Voltage fuse (with holder) transformer (sec.) Gr.00 500V/16A GL/GG	03909, 03760 of M/s Wohner	Siemens/WOHNER ITALWEBER/ Ferraz/Bussmann/ Schneider/GE/L&T	S1F49
36	33 Q1	Motor protective relay water pump MBS 25, 1-1.6 A with aux. Contact HS9.11 and terminal block db	910-201-205 910-292-130 910-293-209	AEG	S1F21
				L&T/Group Schneider/ ABB	
			3RV1021 1AA10 +3RV 1901 1E	SIEMENS	
43	33 K06	Auxiliary contactor SH5.31, DC110V with diode water pump 110VDC	SH5.31 DC110V	AEG	S1K24
			TKC631-Z, 110VDC; GJH12130 61R6312	ABB	
			3RH1131-BF40; 3RT1916-1DG00	Siemens/L&T/ Schneider	
44	33 K07	Auxiliary contactor SH5.31, DC110V with diode water pump 110VDC	SH5.31 DC110V	AEG	S1K25
			TKC631-Z, 110VDC; GJH12130 61R6312	ABB	
			3RH1131-BF40; 3RT1916-1DG00	Siemens/L&T/ Schneider	

Revised:

Sr. No.	Item	Term Function Technical Data	Drawing No.	Manufacturer supplier	Place of Installation
1	12 F01	High Voltage fuse (with holder) net1 Gr.00C 1000V/**16A** AC:gB	2038603 2138601	Siba/EFEN/Ferraz/ETI /Siemens/Bussmann /Schneider/GE/L&T	S1F50
2	12 F02	High Voltage fuse (with holder) net1 Gr.00C 1000V/**16A** AC:gB	2038603 2138601	Siba/EFEN/Ferraz/ETI /Siemens/Bussmann / Schneider/GE/L&T	S1F51
3	12 F03	High Voltage fuse (with holder) net1 Gr.00C 1000V/**16A** AC:gB	2038603 2138601	Siba/EFEN/Ferraz/ETI /Siemens/Bussmann / Schneider/GE/L&T	S1F52
4	12 F04	High Voltage fuse (with holder) net2 Gr.00C 1000V/**16A** AC:gB	2038603 2138601	Siba/EFEN/Ferraz/ETI /Siemens/Bussmann / Schneider/GE/L&T	S1F53
5	12 F05	High Voltage fuse (with holder) net2 Gr.00C 1000V/**16A** AC:gB	2038603 2138601	Siba/EFEN/Ferraz/ETI /Siemens/Bussmann / Schneider/GE/L&T	S1F54
6	12 F06	High Voltage fuse (with holder) net2 Gr.00C 1000V/**16A** AC:gB	2038603 2138601	Siba/EFEN/Ferraz/ETI /Siemens/Bussmann / Schneider/GE/L&T	S1F55
7	12 F10	Low Voltage fuse (with holder) transformer (sec.) Gr.00 500V/**10A** GL/GG	03909, 03760 of M/s Wohner	Siba/EFEN/Ferraz/ETI /Siemens/Bussmann / Schneider/GE/L&T	S1F44
8	12 F11	Low Voltage fuse (with holder) transformer (sec.) Gr.00 500V/**10A** GL/GG	03909, 03760 of M/s Wohner	Siba/EFEN/Ferraz/ETI /Siemens/Bussmann / Schneider/GE/L&T	S1F45
9	12 F12	Low Voltage fuse (with holder) transformer (sec.) Gr.00 500V/**10A** GL/GG	03909, 03760 of M/s Wohner	Siba/EFEN/Ferraz/ETI /Siemens/Bussmann / Schneider/GE/L&T	S1F46
- Due to change in Transformer to 3kVA, 750/415 V, 3-Ø, instead of 9kVA, 750/415/190 V, 3-Ø, as such 3-Ø, 190 V circuit is not required, Item no. S1F47 to S1F49 (along with associated drawings) is not required in LVPH coaches.					
12	12 F15	Low Voltage fuse (with holder) transformer (sec.) Gr.00 500V/16A GL/GG	***---DELETED---***		S1F47
13	12 F16	Low Voltage fuse (with holder) transformer (sec.) Gr.00 500V/16A GL/GG	***---DELETED---***		S1F48
14	12 F17	Low Voltage fuse (with holder) transformer (sec.) Gr.00 500V/16A GL/GG	***---DELETED---***		S1F49

- Pump Equipment is not provided in LVPH coaches. Hence, Pump Circuit switchgears i.e. MPCB, Auxiliary Contactors are not required in Panel for LVPH coaches.				
36	33 Q1	Motor protective relay water pump MBS 25, 1-1.6 A with aux. Contact HS9.11 and terminal block db	***---DELETED---***	S1F21
43	33 K06	Auxiliary contactor SH5.31, DC110V with diode water pump 110VDC	***---DELETED---***	S1K24
44	33 K07	Auxiliary contactor SH5.31, DC110V with diode water pump 110VDC	***---DELETED---***	S1K25

Note: The associated wiring of Water Pump Controller circuit shall not be done in HV panel due to deletion of above mentioned switchgears of same circuit.

Amendment No. - 6 to specification for "Set of panels for LHB EOG Non-AC Coaches" EDTS-355, Rev-1, Am-1, 2, 3 & 4

This Amendment is issued to specification for set of panels for LHB EOG Non-AC Coaches to specification no. EDTS-355, Rev-1, AM-1, 2, 3 & 4 (AM-5 is applicable for LVPH coaches only) to incorporate the requirements/modifications required for provision of 3-Ø, 190V double inlet centrifugal blower assembly in place of 3-Ø, 110V blower assembly in LHB Non-AC coaches and provision of Fire Protection measures in Switch board cabinets. Further, Material of Low Voltage Panel including cable cover for top and bottom is revised to SS304 grade S2 from existing CRCA sheet.

Changes are as under:

1. Following drawing nos. are revised:

   i. CC72081, alt 'nil'. shall be read as CC72081, alt 'a'
   ii. CC72082, alt 'b'. shall be read as CC72082, alt 'c'
   iii. CC72083, alt 'nil'. shall be read as CC72083, alt 'a'
   iv. CC72084, alt 'nil'. shall be read as CC72084, alt 'a'

2. ***Clause no. 4.3*** has been revised as under:

Existing:

The on-board cabinet shall conform to CRCA sheet of thickness 2 mm conforming to IS:513 (Latest Edition) as indicated in the drawing. The on board panel shall be powder coated to Siemens Grey shade no. 6102/08038 of M/s Nerolac Paints or 877 of M/s Berger paints, after giving surface treatment.

Revised:

The on-board cabinet shall be made of stainless steel SS304 grade S2 to IS:6911 (Latest Edition). Welded zones may be given necessary treatment after fabrication and shall not be painted.

3. Provision of MPCB with Auxiliary Contact 1NO+1NC, Thermal Release Range: 0.63-1A, Voltage Rating: 415VAC, Breaking Capacity: 50kA to Cat. No. MS116-1.0, HK1-11 of M/s ABB, Schneider, Siemens, Eaton, L&T or Approved make, for 3-Ø double inlet blower assembly (QPC: 02 nos.) has been made in "Fuse and Terminal Panel". Accordingly, drawing for Fuse and Terminal Panel is revised from CC72082, alt 'b' to CC72082, alt 'c'.

Amendment No. - 6

4. Provision of Fire Protection measures in Set of Panels for LHB EOG Non-AC Coaches as per RDSO letter no. EL/7.1.108/SBC/Main dated 07.01.2022. (Ref.: B, S.No-3)

Type Of Switch Board Cabinet	Provision of Aerosol based Fire Suppression System
Set of Panels for LHB EOG Non-AC Coaches	1 no. 8/10 gm may be provided in onboard panel and 1 no. 100 gm in underslung panel in line with technical parameters and approved makes as per RDSO spec. RDSO/PE/SPEC/AC/0184-2015 (Rev.1) and RDSO letter no. EL/7.1.108/MSSBC dated 17.09.2021. Drawing no. CC72081 & LS71103 may be referred for demarcating fitment of Aerosol based Fire Suppression System.

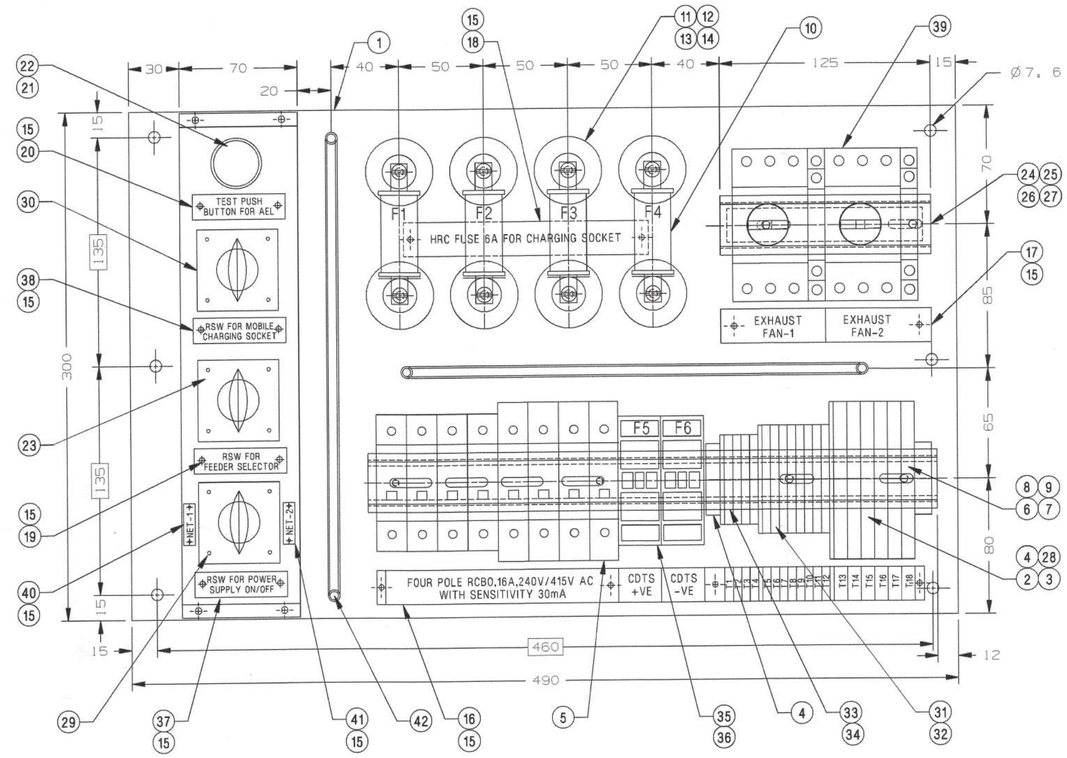

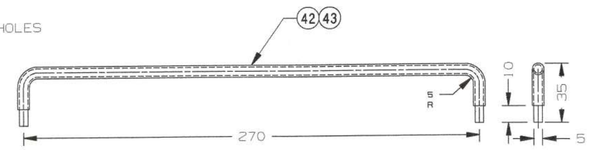

STIFFNER

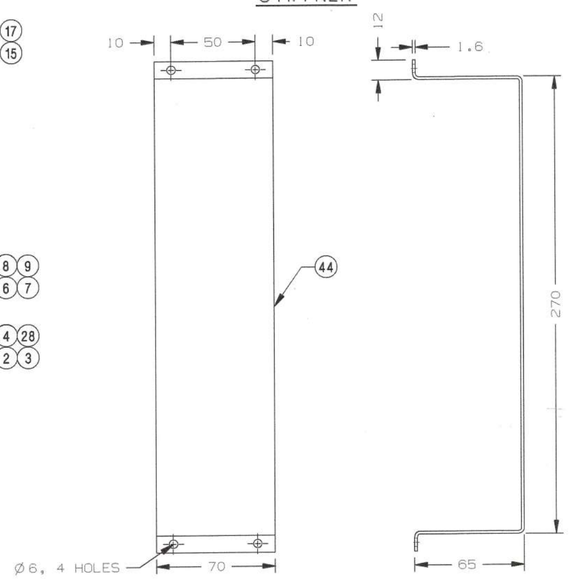

BRACKET FOR RSW

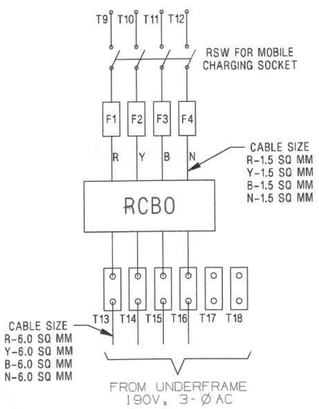

TERMINAL CODIFICATION CHART

T1	RSW POWER SUPPLY	T13	190V 3 Ø AC UNDERFRAME
T2	RSW POWER SUPPLY	T14	190V 3 Ø AC UNDERFRAME
T3	RSW FEEDER SELECTION	T15	190V 3 Ø AC UNDERFRAME
T4	RSW FEEDER SELECTION	T16	190V 3 Ø AC UNDERFRAME
T5	AEL (+VE)	T17	GROUND TERMINAL
T6	AEL (-VE)	T18	GROUND TERMINAL
T7	CDTS (+VE)		
T8	CDTS (-VE)		
T9	RSW MOBILE CHARGING		
T10	RSW MOBILE CHARGING		
T11	RSW MOBILE CHARGING		
T12	RSW MOBILE CHARGING		

ALT.NO	ALT.DATE	ZONE	ALTERATIONS	AUTHORITY
C	27/09/2022	ALL	1.QPC OF ITEM NO.7,8,9&15 UPDATED. 2.DESCRIPTION OF ITEM NO.6,13, 14,16,17,18,19,20,24,37&38 UPDATED. 3.MATERIAL SPEC. FOR ITEM NO.1,7,8, 9,13,14,25,26&27 UPDATED. 3.ITEM NO.39,40,41,42,43&44 ADDED & DRAWING UPDATED ACCORDINGLY.	CR NO. 2300220931

31	3-CONDUCTOR THROUGH TERMINAL BLOCK (T5,T6,T7,T8,T9,T10,T11,T12)	8	NIL	CAT NO. 280-681	OF M/S WAGO OR EQUIVALENT APPROVED MAKE
30	ROTARY SWITCH 10A, 4 POLE, ON-OFF FOR MOBILE CHARGING SOCKET	1	NIL	S10-61004-B13-TDYR	OF M/S SILVER MAKE OR EQUIVALENT APPROVED MAKE
29	ROTARY SWITCH 6A, 2 POLE, ON-OFF FOR POWER SUPPLY	1	NIL	S6-61198-B13-TDYR	OF M/S SILVER MAKE OR EQUIVALENT APPROVED MAKE
28	3-CONDUCTOR GROUND(EARTH) TERMINAL BLOCK (T17 & T18)	2	NIL	CAT NO. 282-687	OF M/S WAGO OR EQUIVALENT APPROVED MAKE
27	PLAIN WASHER S.S	2	NIL	IS: 2016-67,T-3 TY-B,SS304-S2	NIL
26	SPRING WASHER MS	2	NIL	IS: 3063-94,TY-B GSC6	NIL
25	CHEESE HEAD SCREW MSX16	2	NIL	IS: 1366-82,T-1 A2-70	NIL
24	DIN 35 RAIL FOR EXHAUST FAN MPCB, L=125MM	1	NIL	CAT NO. 210-162	OF M/S WAGO OR EQUIVALENT APPROVED MAKE
23	ROTARY SWITCH 16A, 3 POLE 2-WAY WITH OFF FOR FEEDER SELECTION	1	NIL	S16-61153-B03-TDYR	OF M/S SILVER MAKE OR EQUIVALENT APPROVED MAKE
22	CONTACT MECHANISM WITH 1NO+1NC	1	NIL	CAT NO.3SB1400-0A	OF M/S SIEMENS OR EQUIVALENT APPROVED MAKE
21	PUSH BUTTON NORMAL ACTUATOR WITH PLASTIC FRONT RING & HOLDER COLOUR 'GREEN'	1	NIL	CAT NO.3SB1200-0AE01	OF M/S SIEMENS OR EQUIVALENT APPROVED MAKE
20	LEGEND PLATE 1X15X55 (TEST PUSH BUTTON FOR AEL)	1	NIL	IS: 737-74, 19000-H2	BRIGHT * ANODISED
19	LEGEND PLATE 1X15X55 (RSW FEEDER SELECTION)	1	NIL	IS: 737-74, 19000-H2	BRIGHT * ANODISED
18	LEGEND PLATE 1X20X145 (HRC FUSE)	1	NIL	IS: 737-74, 19000-H2	BRIGHT * ANODISED
17	LEGEND PLATE 1X20X125 (EXHAUST FAN-1, EXHAUST FAN-2)	1	NIL	IS: 737-74, 19000-H2	BRIGHT * ANODISED
16	LEGEND PLATE 1X20X325 (FOUR POLE RCBO, CDTS +VE, CDTS -VE, T1 TO T18)	1	NIL	IS: 737-74, 19000-H2	BRIGHT * ANODISED
15	SNAP HEAD RIVET, Ø 2X6	20	NIL	IS: 2907-64, T-2,FIG-1	IS:740 77,64430
14	PLAIN WASHER S.S	8	NIL	IS: 2016-67,T-3, TY-B,SS304-S2	NIL
13	SPRING WASHER MS	8	NIL	IS: 3063-94,TY-B GSC6	NIL
12	INSULATING SPACER	8	NIL	NOVAFLEX/ BINAME	OR ANY OTHER ROF APPROVED MAKE
11	CHEESE HEAD SCREW MSX20,GALVD.	8	NIL	IS: 1366-82, 4.8,TAB-I	NIL
10	HRC FUSE 6A (BOLTED CONNECTIONS)	4	NIL	IS: 13703-93 (PT-II)	3NW TIA OF M/S SIEMENS/GS/GE/ABB MAKE
9	PLAIN WASHER S.S	4	NIL	IS: 2016-67,T-3, TY-B,SS304-S2	NIL
8	SPRING WASHER MS	4	NIL	IS: 3063-94,TY-B GSC6	NIL
7	CHEESE HEAD SCREW MSX16	4	NIL	IS: 1366-82,T-1 A2-70	NIL
6	DIN 35 RAIL FOR RCBO & TERMINAL BLOCKS, L=340MM	1	NIL	CAT NO. 210-162	OF M/S WAGO OR EQUIVALENT APPROVED MAKE
5	FOUR POLE RCBO, 16A, 240/415V AC WITH SENSITIVITY 30MA	1	NIL	CAT NO. 6033-95	OF M/S LEGRAND OR EQUIVALENT APPROVED MAKE
4	SCREWLESS END STOP FOR DIN 35 RAIL	2	NIL	CAT NO. 249-117	OF M/S WAGO OR EQUIVALENT APPROVED MAKE
3	END AND INTERMEDIATE PLATE	1	NIL	CAT NO. 282-308	OF M/S WAGO OR EQUIVALENT APPROVED MAKE
2	3-CONDUCTOR THROUGH TERMINAL BLOCK (T13,T14,T15,T16)	4	NIL	CAT NO. 282-681	OF M/S WAGO OR EQUIVALENT APPROVED MAKE
1	BASE PLATE FOR FUSE AND TERMINAL PANEL 3.25X490X300	1	NIL	IS: 6911(LATEST) SS304-S2	NIL
44	BRACKET FOR RSW,1.6X70X413	1	NIL	IS: 513-94	NIL
43	HEAT SHRINKABLE SLEEVE, L=305MM	2	NIL	NIL	SEE NOTE-4
42	STIFFNER Ø 5, L=325MM	2	NIL	SS304-S2	NIL
41	LEGEND PLATE 1X7X25 (NET-2)	1	NIL	IS: 737-74, 19000-H2	BRIGHT * ANODISED
40	LEGEND PLATE 1X7X25 (NET-1)	1	NIL	IS: 737-74, 19000-H2	BRIGHT * ANODISED
39	MPCB(3POLE)FOR EXHAUST FAN-1&2, WITH AUX.CONT. IND+HC. RANGE:0.63-1A. VOLTAGE RATING:415VAC. BREAKING	2	NIL	MS116-1.0,HK1-11 OF M/S ABB	SCHNEIDER,SIEMENS,ESTON, L&T OR APPROVED MAKE
38	LEGEND PLATE 1X15X55 (RSW FOR MOBILE CHARGING SOCKET)	1	NIL	IS: 737-74, 19000-H2	BRIGHT * ANODISED
37	LEGEND PLATE 1X15X55 (RSW FOR POWER SUPPLY ON-OFF)	1	NIL	IS: 737-74, 19000-H2	BRIGHT * ANODISED
36	HRC FUSE HOLDER	2	NIL	CAT NO.3NW 32NNSF	OF M/S SIEMENS OR EQUIVALENT APPROVED MAKE
35	HRC FUSE 4A, BS-TYPE	2	NIL	CAT NO. 3NW NS4	OF M/S SIEMENS OR EQUIVALENT APPROVED MAKE
34	END AND INTERMEDIATE PLATE	1	NIL	CAT NO. 280-308	OF M/S WAGO OR EQUIVALENT APPROVED MAKE
33	2-CONDUCTOR THROUGH TERMINAL BLOCK (T1,T2,T3,T4)	4	NIL	CAT NO. 280-901	OF M/S WAGO OR EQUIVALENT APPROVED MAKE
32	END AND INTERMEDIATE PLATE	1	NIL	CAT NO. 280-324	OF M/S WAGO OR EQUIVALENT APPROVED MAKE

WELD LENGTH	ITEM	DESCRIPTION & DIMENSIONS	QPASSLY	DETAIL DRG	MATL. & SPEC.	REMARKS
NIL M	GROUP	ELECTRICAL	SUPERSEDES: CC72082 ALT b			
WEIGHT	FILE	Z:\CC72082c.prt (2D)				
NIL KG		FUSE AND TERMINAL PANEL TO EDTS-355, REV-01 FOR LHB EOG NON-AC COACHES				
S.AREA						
NIL M²						
~~LENGTH/DIA~~						
NIL M		RAIL COACH FACTORY, KAPURTHALA				
~~WIDTH/THICK.~~						
NIL M		रेल कोच फैक्टरी कपूरथला IRS				
HEIGHT						
NIL M		SEE/D&D DY.CEE/D&D				

SCALE	SSE/ED	
	CHD	
	DRN	
REF.DRG.No. NIL		
PL NO.	NIL	
DRG.NO.	CC72082	
ALT. C	SIZE A1	SHEET 1/1

THIS DRAWING IS THE INTELLECTUAL PROPERTY OF RAIL COACH FACTORY, KAPURTHALA. THIS DRAWING SHOULD NOT BE REPRODUCED, ALTERED, USED FOR MANUFACTURING OF COMPONENTS, SOLD OR TRANSFERRED WITHOUT PERMISSION FROM CHIEF DESIGN ENGINEER, RAIL COACH FACTORY, KAPURTHALA.

NOTE:-
1. ALL DIMENSIONS IN MM.
* 2. LETTERS OF 3MM HEIGHT SHALL BE DEEP ETCHED AND NEATLY APPLIED WITH BLACK ENAMEL PAINT.
3. FRAMED DIMENSIONS ARE TO BE STRICTLY ADHERED TO.
4. STIFFNER SHALL BE COVERED WITH HEAT SHRINKABLE SLEEVE OF 1.0MM (MIN.) THICKNESS.

ANY MANUAL ALTERATION SHALL AUTOMATICALLY RENDER THIS DRAWING INVALID.
FOR UNTOLERANCED DIMENSIONS REFER MDG0008

DETAIL DRGS STARTING WITH "LI" ARE INTERNAL REFERENCE LISTS ONLY AND ARE NOT FOR ISSUE.
DATE OF FIRST ISSUE 08/02/2012

(4)

ALT.NO	ALT.DATE	ZONE	ALTERATIONS	AUTHORITY
a	27/08/2022	ALL	1.MATERIAL SPEC. FOR ITEM NO.-3, 8&9 UPDATED. 2.DRAWING FOR ITEM NO.1&7 ALTERED & DRAWING MODIFIED ACCORDINGLY.	CR NO. 2300220931

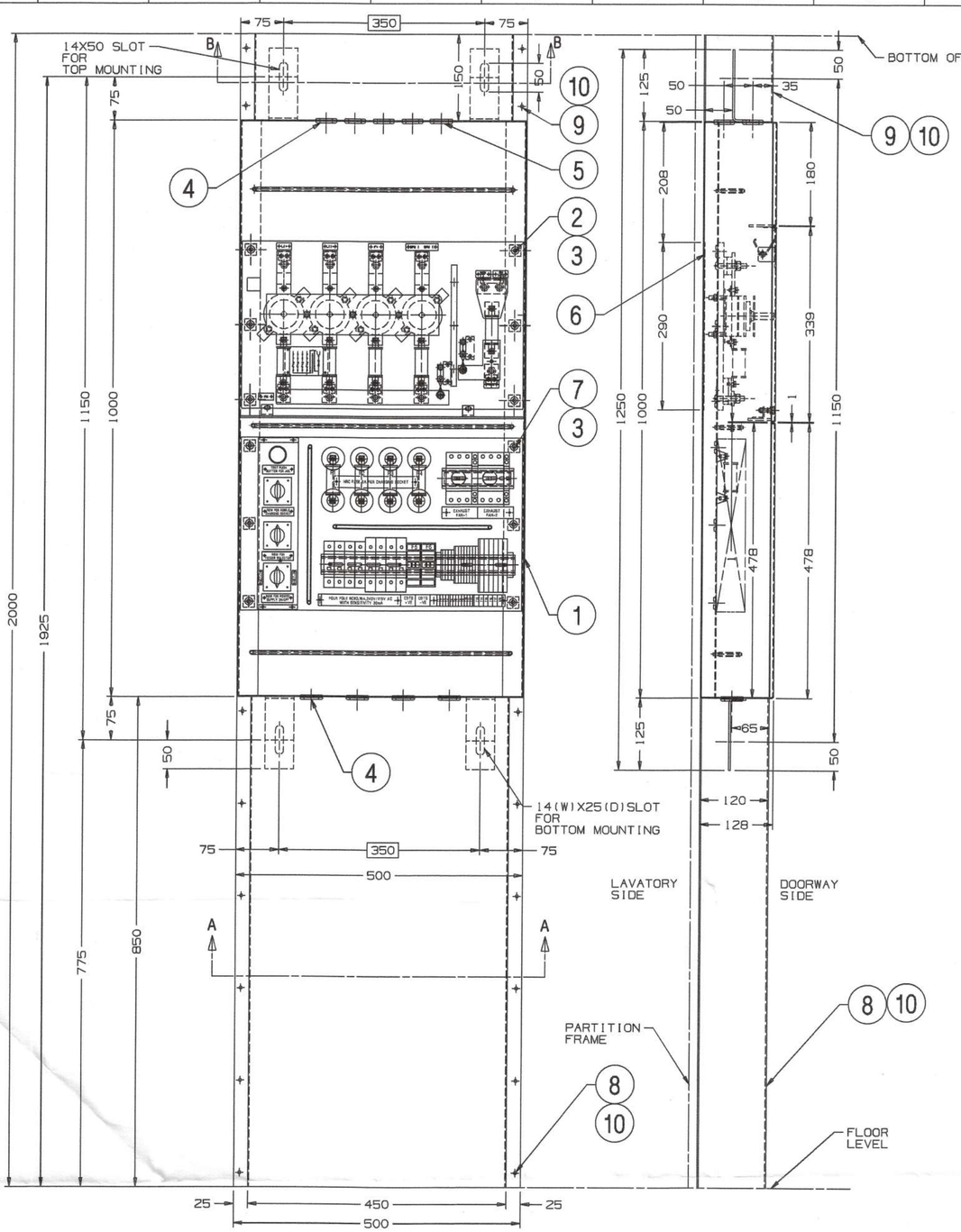

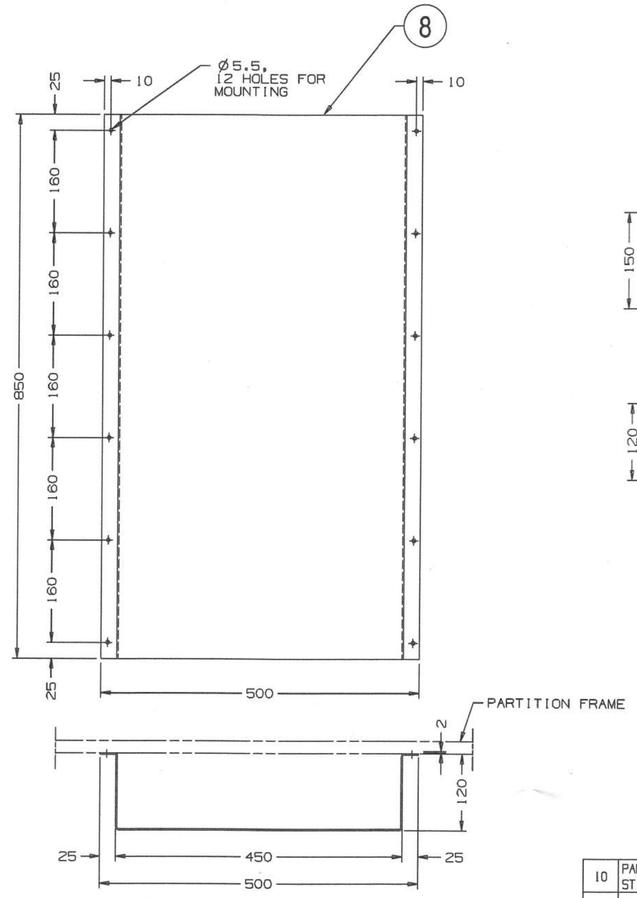

SECTION-AA

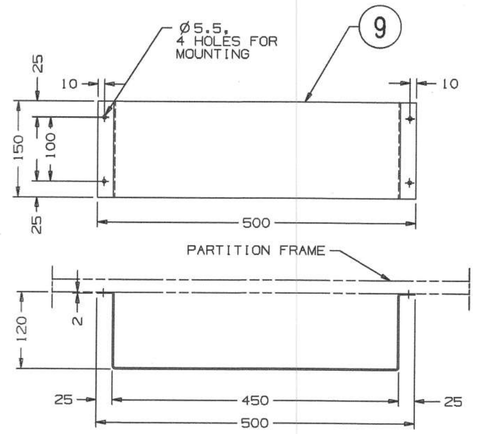

SECTION-BB

10	PAN HEAD SELF TAPPING SCREW ST.4.8X16-F	16	NIL	IS: 7173-89 TY-F	NIL
9	UPPER CABLE COVER 2X731X150	1	NIL	IS: 6911(LATEST) SS304-S2	NIL
8	LOWER CABLE COVER 2X731X850	1	NIL	IS: 6911(LATEST) SS304-S2	NIL
7	FUSE AND TERMINAL PANEL	1	CC72082	NIL	NIL
6	PVC LINING SHEET 490X290X1	1	NIL	PVC FIRE RETARDANT	NIL
5	GROMMET (A=25.4,E=1.9)	6	NIL	IS: 5270-69, TAB-1	NIL
4	GROMMET (A=19,E=1.9)	8	NIL	IS: 5270-69, TAB-1	NIL
3	COUNTER SUNK HEAD SCREW M6X20	12	NIL	IS: 1365-2005, T-1&2,A2-70	NIL
2	FUSE CUM ROTARY SWITCH PANEL	1	CC72399	NIL	NIL
1	CUBICLE BOX COMPLETE	1	CC72083	NIL	NIL

WELD LENGTH	ITEM	DESCRIPTION & DIMENSIONS	QPASSLY	DETAIL DRG	MATL. & SPEC.	REMARKS
NIL M	GROUP	ELECTRICAL	SUPERSEDES: CC72081 Alt NIL			
WEIGHT	FILE	Z:\CC72081a.prt (2D)				

NIL KG
S.AREA NIL M^2
~~LENGTH/DIA~~ NIL M
~~WIDTH/THICK~~ NIL M
HEIGHT NIL M

LOW VOLTAGE PANEL TO EDTS-355, REV-01,FOR LHB EOG NON-AC COACHES

RAIL COACH FACTORY, KAPURTHALA

रेल कोच फैक्टरी कपूरथला IRS

SEE/D&D Bend DY.CEE/D&D

SCALE | SSE/ED | CHD | DRN

REF.DRG.No. NIL

PL NO. NIL

DRG.NO. CC72081

ALT. a | SIZE A1 | SHEET 1/1

3. ITEM-8,9 & 10 ARE TO BE SUPPLIED LOOSE AND BE FITTED ON COACH.
2. FRAMED DIMENSIONS ARE TO BE STRICTLY ADHERED TO.
1. ALL DIMENSIONS ARE IN MM.
NOTE:-

ANY MANUAL ALTERATION SHALL AUTOMATICALLY RENDER THIS DRAWING INVALID.

FOR UNTOLERANCED DIMENSIONS REFER MDG0008

DETAIL DRGS STARTING WITH "LI" ARE INTERNAL REFERENCE LISTS ONLY AND ARE NOT FOR ISSUE.

DATE OF FIRST ISSUE 08/02/2012

THIS DRAWING IS THE INTELLECTUAL PROPERTY OF RAIL COACH FACTORY, KAPURTHALA. THIS DRAWING SHOULD NOT BE REPRODUCED, ALTERED, USED FOR MANUFACTURING OF COMPONENTS, SOLD OR TRANSFERRED WITHOUT PERMISSION FROM CHIEF DESIGN ENGINEER, RAIL COACH FACTORY, KAPURTHALA.

ALT.NO	ALT.DATE	ZONE	ALTERATIONS	AUTHORITY
a	27/09/2022	ALL	1.MATERIAL SPEC. FOR ITEM NO.-7,12,13, 14&15 UPDATED. 2.DRAWING FOR ITEM NO.1 TO 5, 8 TO 11 & 16 ALTERED. 3.NOTE-4 UPDATED AND DRAWING MODIFIED ACCORDINGLY.	CR NO. 2300220931

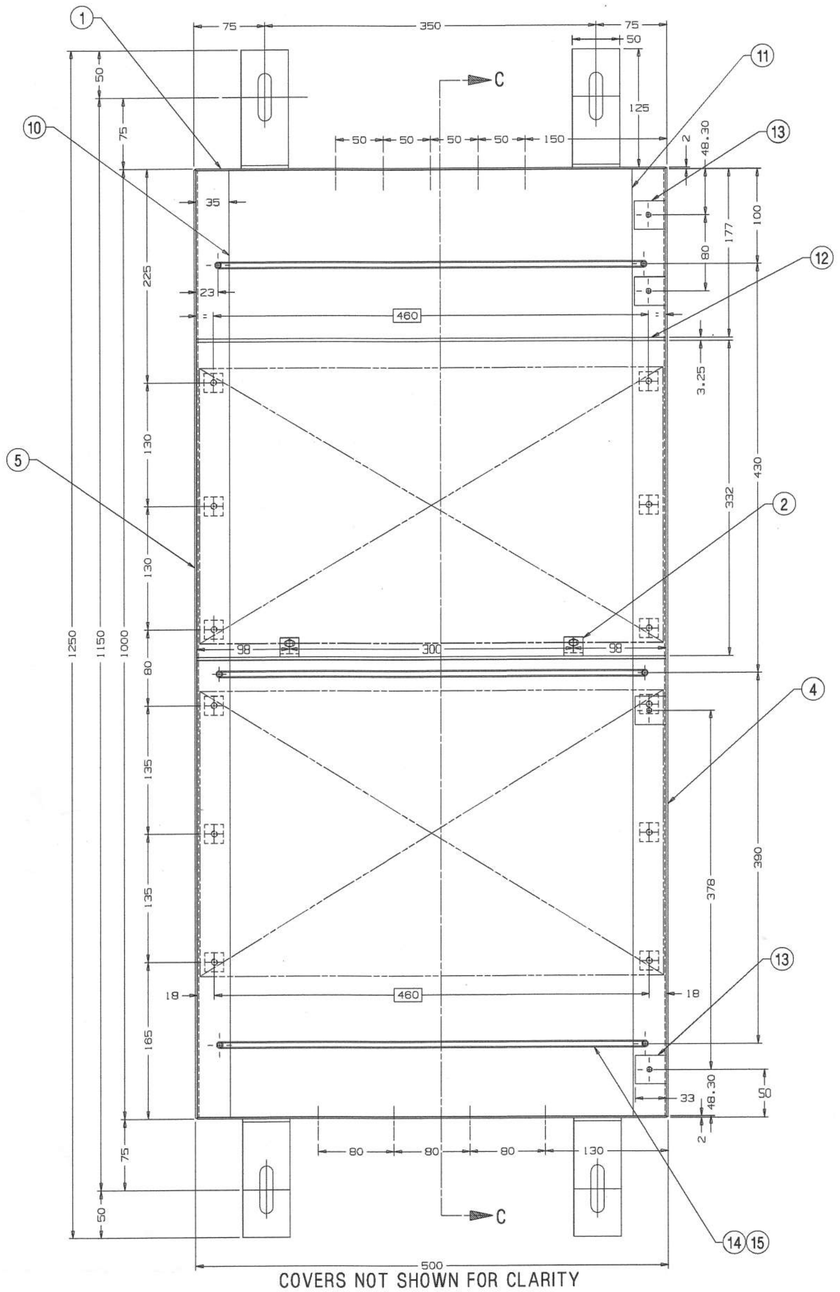

COVERS NOT SHOWN FOR CLARITY

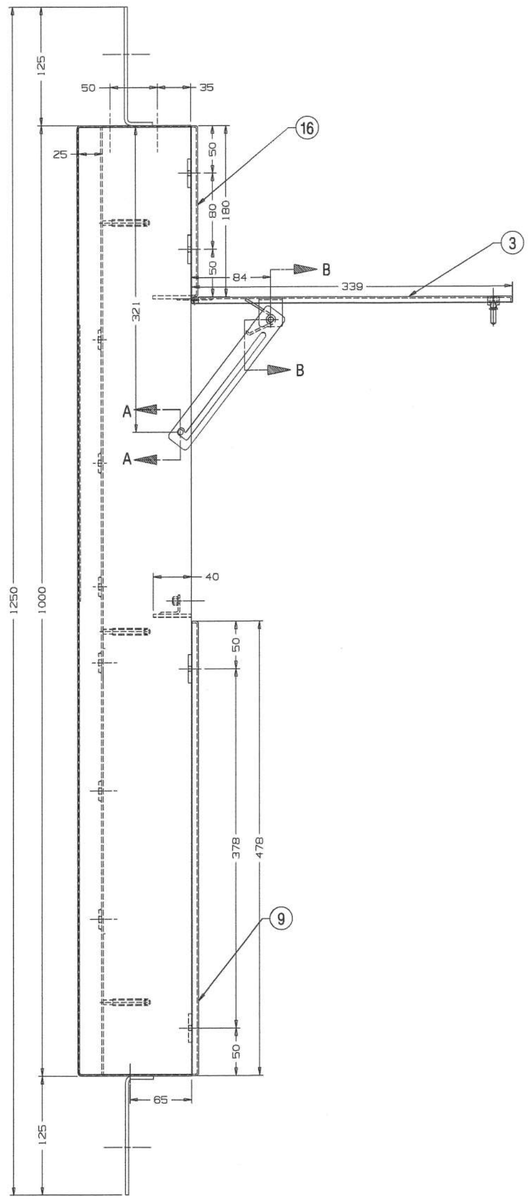

SECTION-CC

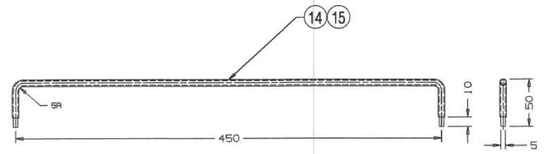

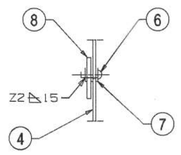

SECTION-AA

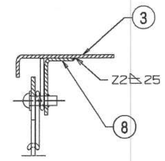

SECTION-BB

16	UPPER COVER	1	CC72084	NIL	ITEM-21
15	HEAT SHRINKABLE SLEEVE, Ø5.5X516	1	NIL	NIL	SEE NOTE-4
14	STIFFENER Ø5X536	1	NIL	SS304-S2	NIL
13	SCREWING PIECE, 3.25X33X30	4	CC72084	NIL	ITEM-20
12	FLAT 3.25X40X496	2	NIL	IS:8911(LATEST), SS304-S2	NIL
11	MOUNTING ANGLE(R.H.S.)	1	CC72084	NIL	ITEM-17 & 18
10	MOUNTING ANGLE(L.H.S.)	1	CC72084	NIL	ITEM-16 & 18
9	LOWER COVER	1	CC72084	NIL	ITEM-15,6&19
8	STOPPER ASSEMBLY	1	CC72084	NIL	ITEM-9 TO 13
7	PLAIN WASHER 5.5	3	NIL	IS:2016-87,T-3, TY-8,SS304-S2	NIL
6	SNAP HEAD RIVET Ø5X14, GALVD.	1	IS: 2998-82, TAB-1&5	IS: 1148-82, STEEL	NIL
5	SIDE COVER(L.H.S.)	1	CC72084	NIL	ITEM-4
4	SIDE COVER(R.H.S.)	1	CC72084	NIL	ITEM-3
3	MIDDLE COVER	1	CC72084	NIL	ITEM-5 TO 8
2	ANGLE	2	CC72084	NIL	ITEM-2&14
1	CHANNEL	1	CC72084	NIL	ITEM-1&22

4. STIFFNER SHALL BE COVERED WITH HEAT SHRINKABLE SLEEVE OF 1.0MM (MIN.) THICKNESS OF RDSO/RCF APPROVED MAKE.
3. ITEM-6 TO BE SUITABLY WELDED IN POSITION SO THAT ITEM-8 ROTATE FREELY.
2. FRAMED DIMENSIONS ARE TO BE STRICTLY ADHERED TO.
1. ALL DIMENSIONS IN MM.
NOTE: -

WELD LENGTH	ITEM	DESCRIPTION & DIMENSIONS	QPASSLY	DETAIL DRG	MATL. & SPEC.	REMARKS
NIL M	GROUP	ELECTRICAL	SUPERSEDES: CC72083 ALT nil			
WEIGHT	FILE	Z:\CC72083a.prt (2D)				
NIL KG		CUBICLE BOX COMPLETE FOR LOW VOLTAGE PANEL TO EDTS-355, REV-01,FOR LHB EOG NON-AC COACHES				
S.AREA						
NIL M2						
~~LENGTH/DIA.~~						
NIL M		RAIL COACH FACTORY, KAPURTHALA				
~~WIDTH/THICK.~~						
NIL M		INDIAN RAILWAYS STANDARD				
HEIGHT						
NIL M		SEE/D&D		DY.CEE/D&D		

SCALE	SSE/ED
	CHD
	DRN
REF.DRG.No.	NIL
PL NO.	NIL
DRG.NO.	CC72083
ALT. a	SIZE A SHEET 1/1

ANY MANUAL ALTERATION SHALL AUTOMATICALLY RENDER THIS DRAWING INVALID.

DETAIL DRGS STARTING WITH "LI" ARE INTERNAL REFERENCE LISTS ONLY AND ARE NOT FOR ISSUE.

FOR UNTOLERANCED DIMENSIONS REFER MDG0008

DATE OF FIRST ISSUE 08/02/2012

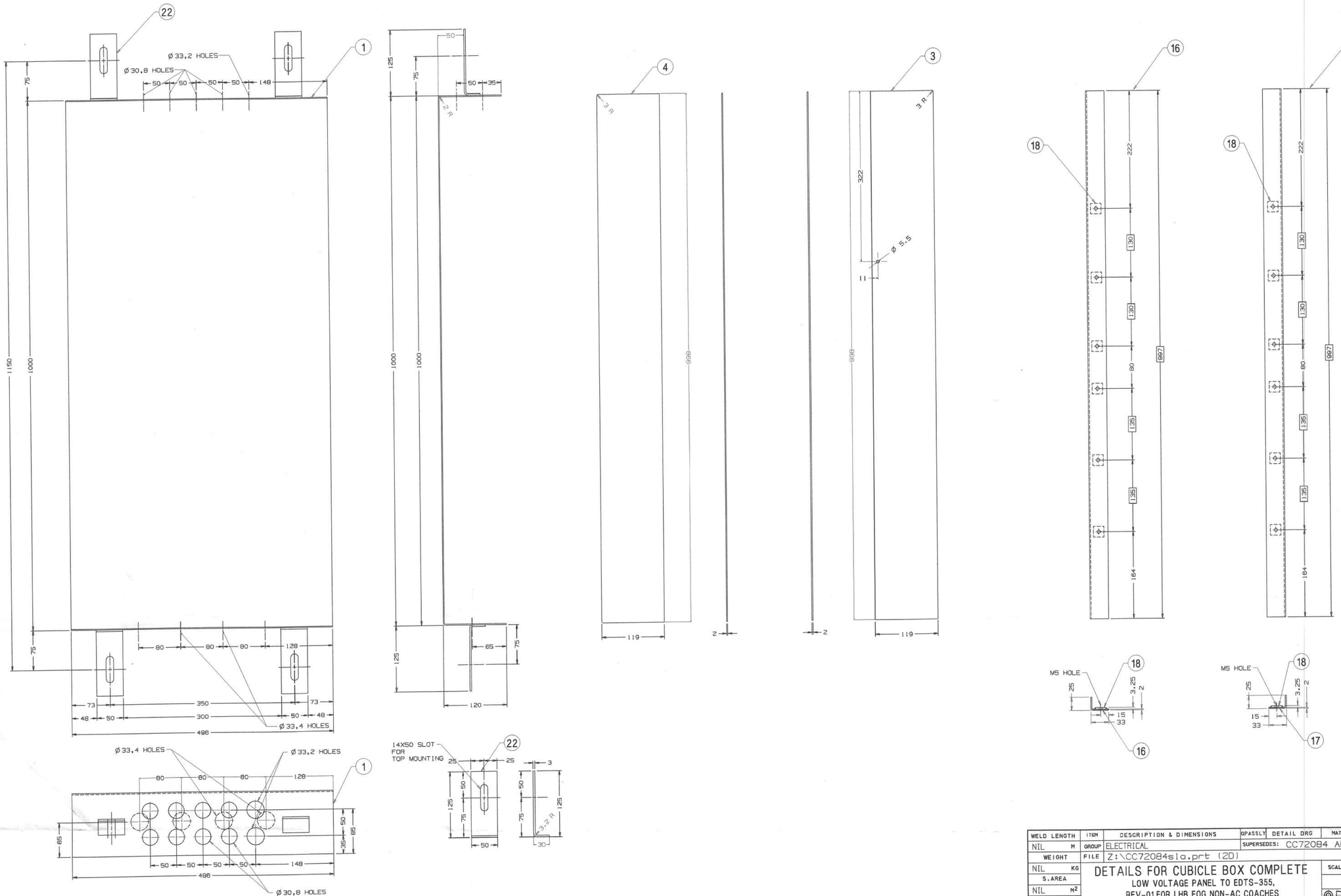

ALT.NO	ALT.DATE	ZONE	ALTERATIONS	AUTHORITY

WELD LENGTH	ITEM	DESCRIPTION & DIMENSIONS	QPASSLY	DETAIL DRG	MATL. & SPEC.	REMARKS
NIL M	GROUP	ELECTRICAL	SUPERSEDES:	CC72084 ALT nil		
WEIGHT	FILE	Z:\CC72084sla.prt (2D)				
NIL KG		DETAILS FOR CUBICLE BOX COMPLETE LOW VOLTAGE PANEL TO EDTS-355, REV-01,FOR LHB EOG NON-AC COACHES			SCALE	SSE/ED
S.AREA						CHD
NIL M^2						DRN
~~LENGTH/DIA~~		RAIL COACH FACTORY, KAPURTHALA			REF.DRG.No.	NIL
NIL M	~~WIDTH/THICK.~~	INDIAN RAILWAYS STANDARD			PL NO.	NIL
NIL M	HEIGHT				DRG.NO.	CC72084
NIL M		SEE/D&D	DY.CEE/D&D		ALT. a	SIZE A1 SHEET 1/2

ANY MANUAL ALTERATION SHALL AUTOMATICALLY RENDER THIS DRAWING INVALID.

FOR UNTOLERANCED DIMENSIONS REFER MDG0008

DETAIL DRGS STARTING WITH "LI" ARE INTERNAL REFERENCE LISTS ONLY AND ARE NOT FOR ISSUE.

DATE OF FIRST ISSUE 08/02/2012

ALT.NO	ALT.DATE	ZONE	ALTERATIONS	AUTHORITY
0	27/09/2022	ALL	1.ITEM NO. 1 TO 7, 9 TO 11 & 13 TO 22 UPDATED AND DRAWING MODIFIED ACCORDINGLY.	CR NO. 2300220931

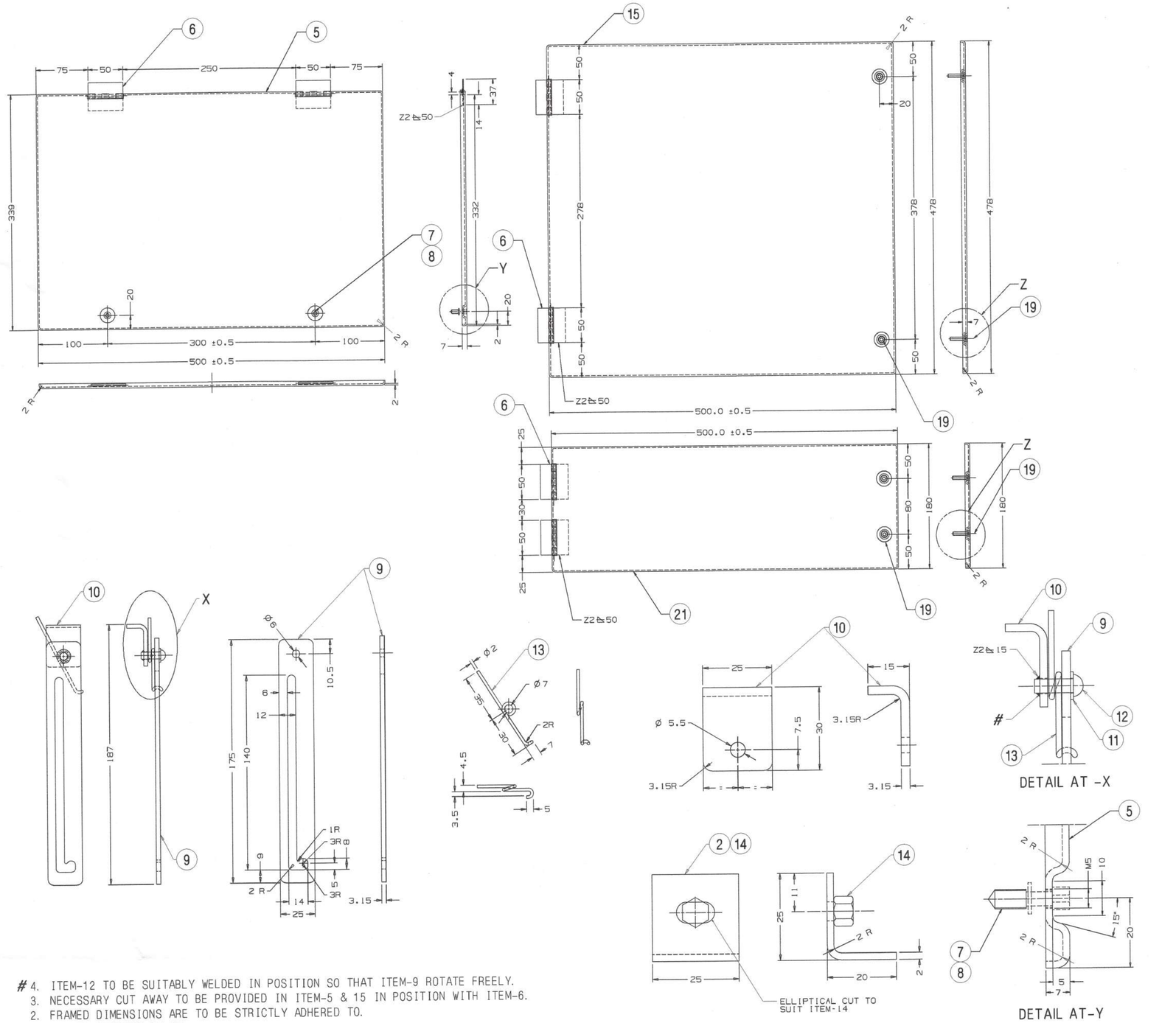

22	MOUNTING ANGLE 3.25X30X149	4	NIL	IS: 8911(LATEST) SS304-S2	NIL
21	UPPER COVER 2X180X500	1	NIL	IS: 8911(LATEST) SS304-S2	NIL
20	SCREWING PIECE 3.25X33X30	2	NIL	IS: 8911(LATEST) SS304-S2	NIL
19	HEXAGON SOCKET HEAD CAP SCREW M5X20	4	NIL	IS:2269-2008, TABLE-1,A2-70	NIL
18	SCREWING PIECE 3.25X20X20	12	NIL	IS: 8911(LATEST) SS304-S2	NIL
17	MOUNTING ANGLE (R.H.S.) 2X57X996	1	NIL	IS: 8911(LATEST) SS304-S2	NIL
16	MOUNTING ANGLE (L.H.S.) 2X57X996	1	NIL	IS: 8911(LATEST) SS304-S2	NIL
15	LOWER COVER 2X478X500	1	NIL	IS: 8911(LATEST) SS304-S2	NIL
14	ADJUSTABLE NUT M5, STAINLESS STEEL	1	NIL	NIL	NIL
13	SPRING	1	NIL	IS:4454-2001, PT-4,Gr.-2	NIL
12	SNAP HEAD RIVET Ø5X14, GALVD.	1	NIL	IS:2998-82, TAB.-1 & 5	IS:1148-82, STEEL
11	PLAIN WASHER 5.5	1	NIL	IS:2016-67,T-3, TY-B,SS304-S2	NIL
10	ANGLE 3.15X25X39	1	NIL	IS: 8911(LATEST) SS304-S2	NIL
9	FLAT 3.15X25X175	1	NIL	IS: 8911(LATEST) SS304-S2	NIL
8	CIRCLIP	2	NIL	IS:3075-86, TY.-C,FIG-1	NIL
7	CAPTIVE SCREW M5	2	NIL	IS:1367-2002, SS304-S2	NIL
6	STAINLESS STEEL BUTT HINGE, 50MM	6	NIL	IS:12817-2013, TAB-3,FIG-1	NIL
5	MIDDLE COVER 2X339X500	1	NIL	IS: 8911(LATEST) SS304-S2	NIL
4	SIDE COVER (L.H.S.) 2X119X998	1	NIL	IS: 8911(LATEST) SS304-S2	NIL
3	SIDE COVER (R.H.S.) 2X119X998	1	NIL	IS: 8911(LATEST) SS304-S2	NIL
2	ANGLE 2X42X25	1	NIL	IS: 8911(LATEST) SS304-S2	NIL
1	CHANNEL 2X496X1233	1	NIL	IS: 8911(LATEST) SS304-S2	NIL

4. ITEM-12 TO BE SUITABLY WELDED IN POSITION SO THAT ITEM-9 ROTATE FREELY.
3. NECESSARY CUT AWAY TO BE PROVIDED IN ITEM-5 & 15 IN POSITION WITH ITEM-6.
2. FRAMED DIMENSIONS ARE TO BE STRICTLY ADHERED TO.
1. ALL DIMENSIONS IN MM.
NOTE: -

WELD LENGTH	ITEM	DESCRIPTION & DIMENSIONS	QPASSLY	DETAIL DRG	MATL. & SPEC.	REMARKS
NIL M	GROUP	ELECTRICAL	SUPERSEDES: CC72084 ALT nil			
WEIGHT	FILE	Z:\CC72084s2a.prt (2D)				
NIL KG		DETAILS FOR CUBICLE BOX COMPLETE LOW VOLTAGE PANEL TO EDTS-355, REV-01,FOR LHB EOG NON-AC COACHES			SCALE / SSE/ED / CHD / DRN	
S.AREA						
NIL M²						
~~LENGTH/DIA.~~		RAIL COACH FACTORY, KAPURTHALA			REF.DRG.No. NIL	
NIL M						
~~WIDTH/THICK.~~		INDIAN RAILWAYS STANDARD			PL NO. NIL	
NIL M					DRG.NO. CC72084	
HEIGHT		SEE/D&D	DY.CEE/D&D		ALT. 0	SIZE A4 SHEET 2/2
NIL M						

ANY MANUAL ALTERATION SHALL AUTOMATICALLY RENDER THIS DRAWING INVALID.
FOR UNTOLERANCED DIMENSIONS REFER MDG0008

DETAIL DRGS STARTING WITH "LI" ARE INTERNAL REFERENCE LISTS ONLY AND ARE NOT FOR ISSUE.
DATE OF FIRST ISSUE 08/02/2012

ICF ANNEXURE NO.1 – FOR RCF SPEC NO. EDTS 355 REV.1 AMD.1

The following clauses shall be read as given below:

SN	CLAUSE NO	EXISTING	TO BE READ AS
1	4.17	CEE	Shall be read as CEE/ICF
2	5.1.1	CEE/RCF	Shall be read as CEE/ICF
3	5.5	RCF	Shall be read as ICF
4	6.1	CEE/RCF	Shall be read as CEE/ICF
5	6.2	CEE	Shall be read as CEE/ICF
6	7.1	RCF	Shall be read as ICF

		15/3/14
PREPARED BY	VERIFIED BY	APPROVED BY

ICF Annexure-2 TO RCF Specification EDTS-355, Rev.1,Amdt-1,2 with ICF Anx.1

To make Non-AC EOG LHB Coaches HOG compliant, RC filters as per RDSO modification sheet RDSO/PE/MS/AC/0051-2011(Rev.2),amd.2 are to be provided in HV panel of LHB EOG Non AC coaches. One RC filter will be provided between phase and neutral and other RC filter will be provided between phase and earth of secondary windings (415V &190V) of 9/15 KVA transformers to improve voltage waveform.

The following Items Added to the BOM in Annexure-A

Sl. no	Term Function Technical Data	Drawing no.	Qty in each Non-AC coach	Place of Installation
55	Each RC filter consists of 1 ohm, 6/10 W resistances connected in series with parallel connected 1.5 MFD 850/1000V range capacitor (Epcos/Vishay or equivalent make capacitor with prior approval of RDSO) In each arm of star connected to be provided between Phase & neutral and phase & earth (415V &190V) of 9 KVA transformer. The RC filter shall be of M/s.Siemens, M/s Medha or any equivalent make. The mounting arrangement of RC filter shall be as per sheet 2 of RDSO drg. No. RDSO/PE/SK/AC/0188-2015(Rev.0)	RDSO/PE/SK/AC/ 0197(Rev-0) And Sheet no. 2 of RDSO/PE/SK/AC/ 0188-2015 (Rev.0)	4 Nos.	HV panel
56	MCBs for Lavatory Exhaust fan Current rating :6A,Curve:C,Voltage Rating:230V AC, Pole:1P, Breaking Capacity :10KA	408587(Legrand), CSMBS1C6(C&S), 5SL41067(Siemens), SH201MC-C6 (ABB), BB10060C(L&T)	3 nos.	LV Panel
57	Rotary switch 10A, 4P, On/Off for Lavatory Exhaust Fan	61196 S B B03 TD YR of Slazer	1 no.	LV Panel

The following Drawing added to Cl.8.0

Sl no	Drawing no.	Description
11	ICF/SK3-7-1-079	RBC mounting requirements

The following Pump control items Deleted From the BOM in Annexure-A

Sl. no.	Item	Term Function Technical Data	Drawing no.		Manufacturer Supplier	Place of Installation
36	33 Q1	Motor Protective Relay water pump MBS 25,1-1.6 A with aux. contact H59.11 and terminal block db	910-201-205 910-292-130 910-293-209		AEG	S1F21
					L&T /Group Schneider/ ABB	
			3RV1021 1AA10 +3RV 1901 1E		Siemens	
43	33 K06	Auxiliary contactor SH5.31, DC 110V with diode water pump 110V DC	SH5.31, DC110 V		AEG	S1K24
			TKC631-Z,110V DC	GJH12130 61R6312	ABB	
				3RH1131-BF40	Siemens/ L&T/ Schneider	
				3RT1916-1DG00		
44	33 K07	Auxiliary contactor SH5.31, DC 110V with diode water pump 110V DC	SH5.31, DC110 V		AEG	S1K25
			TKC631-Z,110V DC	GJH12130 61R6312	ABB	
				3RH1131-BF40	Siemens/ L&T/ Schneider	
				3RT1916-1DG00		

Note: - 1.Firms shall get Layout/Drawing approval for location of the additional items before supply of set of panels.
2. RC Filter shall be mounted on HV Panel in the place provided for Pump Controller.
3. For exhaust fan, additional 4 Nos. of 3 conductor through TB(280-681 of Wago) to be Provided in LV Panel & pump TB to be used in HV Panel.
4. Exhaust Fan wiring shall be done as per Annexure-C in HV & LV Panels.

ICF Annexure-3 TO RCF Specification EDTS-355, Rev.1, Amdt-1, 2, with ICF Anx.1&2

RDSO issued 4.5KW underslung type constant voltage Regulated Battery Charger to specification RDSO/PE/SPEC/AC/0183 Rev-0-2015 for charging battery and coach load. 4.5KW underslung RBC is directly mounted with the coach members, hence the box for mounting RBC is not needed.

In Clause 4.1 (ii) Battery Charger Box to drawing no **LS71104 Alt-a is Deleted.**

(iii) In Low voltage panel cable cover for top and bottom as indicated in the drawing CC72081 ANX-1 (items-8, 9 & 10 only) is **Deleted**.

The following clauses 4.25, 4.25.1, 4.25.2 & 4.26.4 **Deleted**

In Cl.8.0 ENCLOSURES the following Drawing Revised/Added/Deleted

Sl no	Drawing no.	Description	Remarks
1	LS71103 Alt-a ANX-1&2	HV Cubicle	Revised
2	LS71104	Regulated Battery Charger Cubicle	Deleted
3	LS71105	Terminal Codification for Battery Charger	Deleted
4	CC72081 ANX-1	Low voltage on board Rotary Switch Panel	Revised
11	ICF/SK3-7-1-079	RBC mounting requirements	Deleted
12	ICF/SK3-7-2-047	Fuse and Terminal Panel to EDTS-355	Added

The following items Deleted From the BOM in Annexure-A

Sl. no.	Item	Term Function Technical Data	Drawing no.	Manufacturer Supplier	Place of Installation
29	29 F01	Low voltage fuse (with holder) switch cabinet Gr.00 25A	03912, 03760 of M/S Wohner	Siemens/ wohner-italweber/ Ferraz / Bussmann/ Schenider / GE/L&T	S1F42

30	30 F02	Low voltage fuse (with holder) switch cabinet Gr.00 25A	03912, 03760 of M/S Wohner	Siemens/ wohner-italweber/ Ferraz / Bussmann/ Schenider / GE/L&T	S1F43
45	X3	Terminal block x3	Drawing no.LS71105	Wago / Phonix / Weidmuller	S1X3
56		MCBs for Lavatory Exhaust fan Current rating: 6A,Curve:C, Voltage Rating:230V AC, Pole:1P, Breaking Capacity :10KA	408587(Legrand), CSMBS1C6(C&S), 5SL41067(Siemens), SH201MC-C6 (ABB), BB10060C(L&T)	3 Nos.	LV Panel

<u>The following Item Added to the BOM in Annexure-A</u>

Sl. no	Term Function Technical Data	Make / Model No.	Qty	Place of Installation
58	Motor Protection Relay for Exhaust fan (70W, 3Phase, 190V AC). 0.24A to 0.4A, 3 pole, DIN Rail mounted,	3VU1340-0MD00 of Siemens or MS116-0.4 of ABB or GV2ME03 of Schneider or ST419060000 of L&T	4 Nos	LV Panel

In annexure-B TERMINAL BLOCK IN HV PANEL the following TBs are revised for connecting RC filter.

TB NO	OLD PART NO	REVISED PART NO	
10	284-681	283-671	TRANSFORMER OUTPUT 415V
11	284-681	283-671	TRANSFORMER OUTPUT 415V
12	284-681	283-671	TRANSFORMER OUTPUT 415V
13	284-681	283-671	TRANSFORMER OUTPUT 415V
14	284-681	283-671	